Forno Bravo, LLC

Pompeii Oven™ Plans Version 2.0

Build an Authentic Italian Wood-Burning Oven

A MAJOR CAUSE OF OVEN-RELATED FIRE IS FAILURE TO MAINTAIN REQUIRED CLEARANCES (AIR SPACES) TO COMBUSTIBLE MATERIALS. IT IS OF UTMOST IMPORTANCE THAT YOU FOLLOW PROPER SAFETY PRECAUTIONS IN ACCORDANCE WITH THESE INSTRUCTIONS.

Forno Bravo, LLC
251 West Market Street
Salinas, CA 93901
(800) 407-5119
info@fornobravo.com
www.fornobravo.com

© Forno Bravo, LLC 2007-2009. All Rights Served.

WARNING

Read this before beginning your project

No warranties of any kind, either expressed or implied, as to the accuracy of this information or its suitability for a particular purpose, are made. Forno Bravo hereby expressly disclaims any and all express or implied warranties, and does not make any warranty or guaranty, or make any representation whatsoever, express or implied, regarding the use or result of any information or services provided by this document. Forno Bravo will not assume any liability for any loss or damage of any kind, arising out of or caused by, directly or indirectly, the use of this information.

Failure to heed this warning may result in damage to property, bodily injury or death.

Keep children and pets away from hot oven.

Use firewood for burning only. DO NOT use charcoal, pressure treated lumber, chipped wood products, sappy wood such as pine, laminated wood or any material other than dry medium or hard firewood.

DO NOT USE liquid fuel (firelighter fluid, gasoline, lantern oil, kerosene or similar liquids) to start or maintain a fire.

BEWARE of very high temperatures in the oven and use long oven gloves and mitts to handle pots and tools. DO NOT put unprotected hands or arms inside oven while it is lit.

Dispose of ashes using a metal shovel and place in a metal bin with a tightly fitting lid. The container should be stored on a non-combustible surface, away from all combustible materials. Ensure ashes are completely cold before disposing of them appropriately.

BEWARE of flying sparks from mouth of oven. Ensure that no combustible materials are within range of oven at any time.

DO NOT close the oven door fully while a fire is in the oven. Closing the door fully will cut off oxygen to the fire, causing the fire to erupt suddenly when the door is removed. Always keep door tilted to allow air to circulate in the oven.

DO NOT use water to dampen or extinguish fire in the oven.

FIRE can result from incorrect installation or use of this oven. It is essential to use only building and insulation materials designed for the purpose.

Contact your local building department for clarification on any restrictions on installation of this oven in your area.

Follow the instructions for curing the oven. Failure to follow the curing schedule can cause damage to the oven.

© Forno Bravo, LLC 2007-2009. All Rights Served.

Table of Contents

Introduction 4
The History of Brick Ovens 6
Why Build a Pompeii Brick Oven Instead of a Barrel Vault Oven 7
Tuscan vs. Neapolitan Style Wood-Fired Ovens 9
Getting Started: A Brick Oven Overview 10
Oven Dimensions 13
1. Foundation 19
2. The Oven Stand 22
3. Framing the Hearth 25
4. Pouring the Hearth 29
5. Setting the Cooking Floor 31
6. Starting the Oven Dome 33
7. Building the Dome 36
8. Building the Oven Opening 40
9. Finishing the Oven Dome 42
10. Oven Vent 45
11. Oven Arch and Door 48
12. Attaching the Chimney 50
13. Oven Dome Insulation 54
14. Enclosure Design Styles 56
15. Igloo Enclosure 59
16. Walled Enclosures 61
17. Curing Your Oven 64
Important Notes 64
Appendix 1. Materials and Tools List 65
Appendix 2. Brick Primer 68
Appendix 3. Why the Pompeii Oven Plans are Free 70
Appendix 4. Thermal Mass Primer 71
Appendix 5. Wood-Fired Oven Anatomy 73
Appendix 6. High Heat Mortar 74
Appendix 7. Pompeii Oven Kit 75

© Forno Bravo, LLC 2007-2009. All Rights Served.

Introduction

An Introduction – Before You Build

The Pompeii Oven is a set of free plans that describes how to build a traditional Italian brick pizza oven. The oven is constructed using firebricks, specialist refractory materials and high temperature insulators, and basic building materials. The refractory materials can be purchase either from Forno Bravo, or from your local masonry supply store, while the basic materials can be easily found at any building supply stores (Home Depot, Lowes, B&Q, etc.). Forno Bravo also provides Pompeii Oven Kits, which contain the core refractory and insulating components for the Pompeii Oven plans.

It's a great oven, and a great project. Much like Open Source Software, these plans are freely accessible for your use, though Forno Bravo reserves all rights and the plans cannot be copied, or re-distributed without our approval. If you are curious why the plans are free (really), read our Why Free page (see Appendix 3). Otherwise, join our User Group (http://www.fornobravo.com/forum) and have fun!

A Little History

Wood-fired brick ovens and pizza have been with us since the dawn of civilization. Both have been discovered in the excavations of virtually every ancient civilization, with the brick oven reaching its modern form in ancient Rome. The brick ovens uncovered in ancient Pompeii and Naples are in wonderful shape, and could start baking today with only minor restoration -- the Pompeii Oven is named in their honor. When you have a minute, take a look at our ancient Pompeii Oven Photographs .

In modern Italy, the basic Pompeii Oven design is used to build the brick ovens you see in pizzerias and private homes and gardens. The wood-fired oven is great for cooking virtually anything that can be cooked in an ordinary oven, including pizza, roasts, Focaccia, vegetables and bread. The oven can bake at high and low heat, and it excels at roasting and grilling. It heats up quickly and is efficient at holding the high heats required for cooking the perfect three-minute Vera Pizza Napoletana. The Pompeii Oven is also very efficient with wood fuel and at holding heat. If you are interesting in reading more about the theory behind the Pompeii Oven design, read our Why Round description in the eBook introduction.

There are literally **million**s of round wood-fired ovens in Italy, putting you in very good company should you decide to build a Pompeii Oven at your home. The brick oven is as common in Italy as the BBQ is in the U.S., and our goal is to bring these great ovens into the English-speaking mainstream. Today, hundreds of Pompeii Ovens have been built around the world, including the US, Canada, UK, Ireland, France, Belgium, Denmark, Sweden, Russia, the Czech Republic, Bahrain, Saudi Arabia, Iraq, Japan, China, Malaysia, the Philippines, Thailand, Mexico, Brazil, the Virgin Islands, Australia, New Zealand, South Africa-- and more Pompeii Ovens are being built every day.

It is not necessary to have professional masonry skills to construct the oven, as evidenced by the numerous successful Pompeii Ovens already constructed by individuals with no special construction skills other than a strong desire to reap the benefits of their labor.

We know that there are other plans for building a brick oven, but we are confident that the Pompeii Oven is the right design for virtually every homeowner. Heck, 60 million Italians couldn't be wrong about their round brick ovens. Contact us if you have any questions on brick oven design and performance. Take a look at Forno Bravo Photos for inspiration -- there are hundreds of brick oven photos.

Oven Size

The plans describe 36" and 42" (internal diameter) brick oven sizes. You can either follow these directions closely, building your oven to the same dimensions we describe, or you can make modifications to meet your specific size or space requirements. We do not describe a small 30"-32" oven, because while you can readily build an oven this size, the additional cost and effort of building the larger 36" are not great, and we think you will appreciate having the extra space. The 42" brick oven is large enough for a

© Forno Bravo, LLC 2007-2009. All Rights Served.

majority of home cooking requirements, so we do not describe a larger oven.

If you have the space and budget, we recommend building the 42” oven. The larger oven gives you the most flexibility, can be easier to use, and does not stop you from cooking smaller amounts of food. Remember that while you can cook less in a larger oven, you cannot cook more in a smaller oven.

Getting Started

We recommend that you join the Forno Bravo Forum, our online user group, before you start your project. The community can answer your questions and try to help you get off on the right foot. One of the great powers of the Internet is that it enables everyone to share ideas, so that others can gain from your experience, and you can learn from experienced builders. Take lots of pictures, and when your oven is completed, please forward them to us so that we can post them to the site. Use of the plans is widely encouraged, so tell your friends.

One Last Note

Please take a moment to read all of the instructions, and look at all of the photographs, before embarking on the Pompeii Oven project. It is not for everyone. The project can be challenging, and requires time, patience, and muscle power.

Our goal is to bring the pleasure of wood-fired cooking to everyone, and there are a number of ways that we can help make that happen. If it appears that the Pompeii Oven project might be beyond your skill set, or available time, contact us regarding a traditional modular oven kit.

Good luck with your project!.

Build!, Cook! Enjoy!

Forno Bravo, LLC

© Forno Bravo, LLC 2007-2009. All Rights Served.

The History of Brick Ovens

Some Background

The Pompeii Oven project was born during a trip to Sorrento and Naples -- the birthplace of pizza, as well as the home of both Pompeii and Herculaneum. I had been interested in wood-fired ovens for a number of years, and had built a number of them, both from brick and from modular oven kits. Like most visitors, I went looking forward to the pizza and to seeing Pompeii, but I was not prepared for how impressive both would be.

I knew that ovens had been discovered at Pompeii, but at the same time I had read in various books and articles that implied that the ancient ovens were simpler than modern brick ovens, so I wasn't expecting much. Instead, I found that the ovens in Pompeii are not only well preserved, they also demonstrate excellent engineering skill.

The ancient ovens were used inside shops, which also served as retail stores. The ovens were well shaped, well insulated, well vented, and beautifully built. The cooking floors were made from 2” terracotta tiles, and the domes were round, and spherically shaped. The domes were built using bricks covered with about 1" of mortar, and insulated with an expanded clay. The neighborhoods where the ovens were located were also home to food shops, which had insulated terracotta trays for serving both hot food and cold drinks. My guess is that the pizza and drink you could find in ancient Pompeii was probably better than what you find in today's shopping mall pizzerias.

Reading more, I have learned that there are a number of examples of Roman craftsmanship using traditional materials, such as brick, concrete, and glass, which modern artisans do not yet fully understand, and cannot accurately re-create to this day. In fact, many of the "modern" ovens you find in the Italian countryside, typically built before the second war, are made from stone, not brick and terracotta -- giving them a very rough and rustic quality. The stone cooking floor on these ovens is very uneven, making cooking an adventure. Like many other things, the brick oven took a brief step backward after the fall of the Roman Empire.

33 brick ovens have been uncovered in Pompeii, and it was instructive to see are in varying degrees of disrepair, which by luck show how the ovens were built. It is possible to see the edges of the cooking surfaces, the oven domes exposed from under their clay insulation, the oven vents and chimneys, and even a cross-section of the brickwork that made up the dome itself.

The Modern Wood-Fired Oven

Later, after having spent hours with my head inside the ovens at the excavations, my family and I ventured out at night to eat some of the world's best pizza.

The Neapolitans have elevated pizza to an art form. In fact, they are so proud of their culinary heritage, they have just requested that the European Union regulate Vera Pizza Napoletana the same way it controls Champagne, Chianti, Mozzarella and Parmesan. In Pompeii and Naples, I was struck not only by the great pizza, but also by the fact that the ovens were so similar to the ancient Pompeii ovens that I had seen during my days of exploring. After a few evenings of talking with restaurant owners and pizzaioli, I decided to re-create the Pompeii Oven, and to make it a project that could be done by hobbyists, enthusiasts, and builders around the world.

Building the First Oven

The next step was to actually build a Pompeii Oven. Jim Hatch and I met on-line on a brick oven user group, and began exploring how to best put the Pompeii Oven idea to work in the real world. Jim's creative solutions to oven design and construction issues were great, and we concluded that the oven would work for an English-speaking audience. Jim took the plunge, and started the first Pompeii Oven.

Jim completed his oven in July 2004, less than three months after we started talking about the idea. Jim's oven is beautiful, and cooks wonderfully -- and the Pompeii Oven was born.

© Forno Bravo, LLC 2007-2009. All Rights Served.

Why Build a Pompeii Brick Oven Instead of a Barrel Vault Oven

1. The round Pompeii Oven design heats up much more quickly than a barrel vault oven -- less than an hour, compared with 2-3 hours or more for the heavier rectangular oven. The round dome is self-standing (as is the Duomo in Florence), so it does not require concrete cladding to hold it together. Because the barrel vault has a great deal of outward thrust, it needs a lot of concrete for buttressing. As a result, the round oven can be much thinner; 2”-4”, compared with a 9”+ thick barrel vault dome.

2. The barrel vault oven burns more wood (which isn't good for the environment or your pocketbook). For many owners, heat up time is the difference between using their oven during the work week, or not at all. Round oven owners use their ovens a couple of times a week, and sadly, we know barrel vault oven owners who never fire their ovens.

3. Pizza should bake at 750ºF, or higher. The Pompeii Oven can easily reach and hold that heat, baking authentic Italian pizza for long periods of time. The heavier barrel vault oven has serious trouble reaching and holding those high temperatures. The problem with too much thermal mass is that the heat from your fire must heat the entire mass in order for the oven to work properly. When the oven dome and floor are not fully heated, the heat from the fire is continually moving away from the inside of you oven, where you want it for cooking, toward the outer edge of the thermal mass. That continues to happen until the entire mass is heated, which can take a very, very long time in a barrel vault oven. For more information, read the Thermal Mass Primer (Appendix 4).

4. The Pompeii Oven is designed for fire-in-the-oven cooking and pizza. With a round oven you have room for your fire on one side, and your food and pizza on the other side and in the back. The entire oven can be easily reached. With a 32” x 36” rectangular cooking floor in a barrel vault oven, there is not a good place for the fire. If you put it on one side, you have very little room for food on the other side, and you cannot access the back. If you put the fire in the back, the heat and flame do not reflect to the front of the oven. A 35" round Pompeii Oven gives you much more usable space than a 32” x 36”. For all the effort you are going to be putting into installing a wood-fired oven, a 32” x 36” rectangular oven is a one-pizza oven -- which is a shame.

5. The Pompeii Oven cooks more evenly. The round, spherical dome does a better job of bouncing heat evenly on the cooking floor. You can cook pizza everywhere (or roasts and veggies) in the oven, and it cooks evenly. That is how Italian pizzerias bake all those pizzas every evening. The rectangular barrel vault design gives you hot and cool spots, depending on the location of the fire.

6. The Pompeii Oven provides better airflow, as cold air draws in lower half of the oven opening, up the oven walls, and cross the top of the oven dome, before it exits the oven as hot air through the top half of the oven opening.

7. The round oven is easier clean up.

The only downside is that a pizza oven can only bake around 20-30 loaves of bread from a single firing, not 75. But for a home oven, that typically works well. You can bake more bread than you could ever eat.

There are millions of pizza ovens in Italy, and they are all round. I also think it is interesting that there is a great deal of wood-fired bread in Italy (Pane Cotto a Legna), which is baked in large commercial, rectangular barrel vault ovens. It is clear that there are two basic wood-fired oven designs: pizza ovens and bread ovens, so you should think about how you want to use your oven.

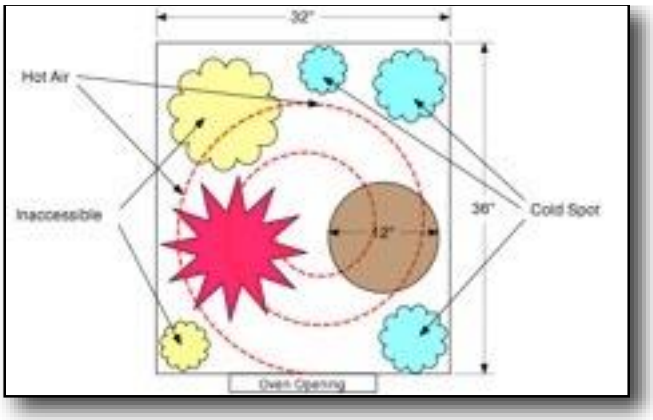

© Forno Bravo, LLC 2007-2009. All Rights Served.

Cold spots in a rectangular oven.

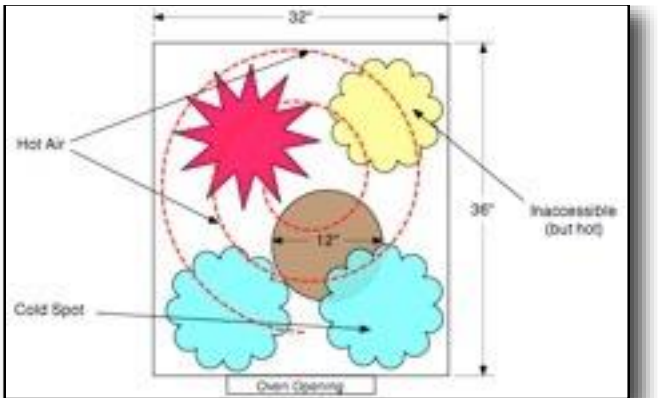

More cold spots in a rectangular oven.

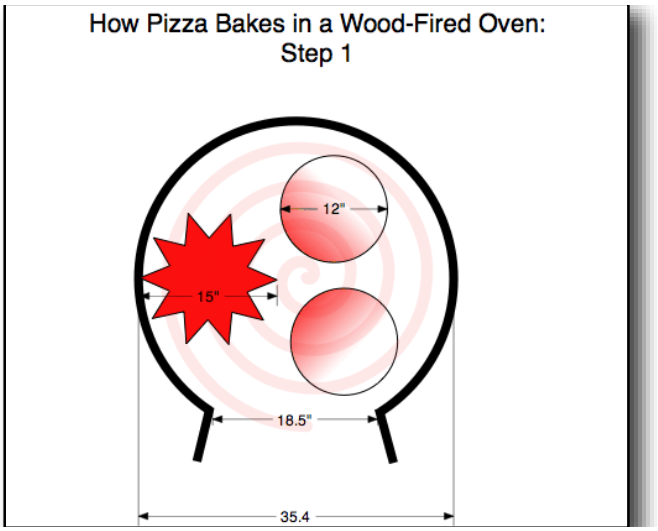

Pizza in a round wood oven: Step 1.

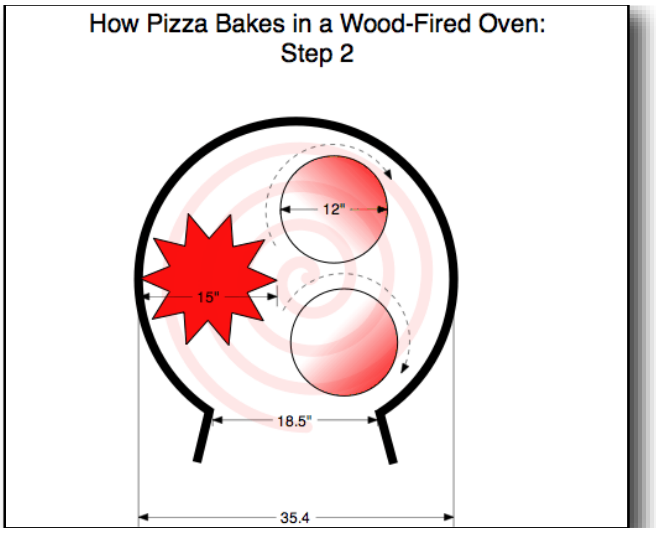

Pizza in a round wood oven: Step 2.

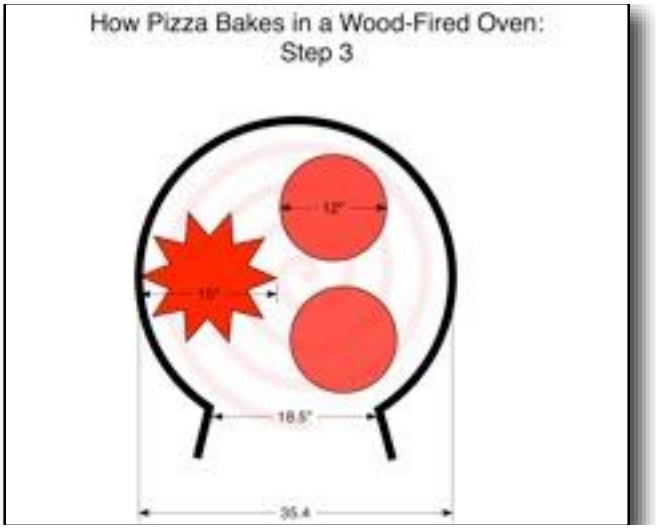

Pizza in a round wood oven: Step 3.

© Forno Bravo, LLC 2007-2009. All Rights Served.

Tuscan vs. Neapolitan Style Wood-Fired Ovens

There are two basic styles of Italian wood-fired pizza oven: the Neapolitan oven, which has a more aggressive curve, flatter dome, and a lower dome height, and the Tuscan oven, which has less aggressive curve and a higher dome. While both oven styles perform well with all types of cooking, the Naples-style oven is more tuned to pizza, because the lower dome gets hotter and reflects more heat from the fire for cooking pizza.

Because the Tuscan design has a larger oven space above the door opening, it is more efficient at holding heat, and uses less wood. The high dome also allows for a large oven opening, making it easier to work with larger roasts and pans. It is also true that the higher dome is somewhat easier to build, as the inward curve is less pronounced, and there is less risk of a chain of bricks falling in before they are locked in place with a keystone.

The higher curve of the Tuscan oven.

A taller first course and steeper, lower dome characterize the Naples-style oven.

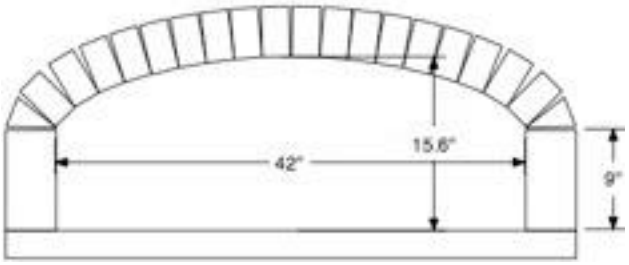

A sample Naples-style oven dome curve.

Our view that the differences between the two oven styles have be exaggerated, and we heartily believe that you will be extremely happy with either design, or if you choose to build your own hybrid between the two. Practically speaking, the dome height difference between the two oven styles in a typical 36” backyard oven is only about 3”-4”.

You can make perfect Pizza Napoletana in a higher domed oven, and you can bake and roast in a lower dome oven. The only real limitation is that with its physically lower dome, and resulting smaller oven opening, the Naples-style oven can keep you from cooking larger roasts or from using certain types of pans. Regardless of which style you choose, the spherical oven dome shape evenly reflects heat down on the cooking surface.

© Forno Bravo, LLC 2007-2009. All Rights Served.

Getting Started: A Brick Oven Overview

The Pompeii Oven is comprised of a number of basic components, which we will define here to give you a better understanding how you will go about building your oven.

Other resources include:

The Anatomy of a Wood-Fired Oven shows the various parts of the oven (see Appendix 5).

Our Thermal Mass Primer shows how wood-fired ovens absorb and hold heat, and cook (see Appendix 4).

The Pompeii Oven Kit (see Appendix 7).

1. The Foundation

Your oven enclosure rests on a traditional reinforced 5 1/2" concrete slab. It can be a stand-alone slab built specifically to support your oven, or it can be poured to accommodate other outdoor kitchen items including counters, grills and tables. Your outdoor kitchen can, and probably will, evolve over time. If you live in part of the world with deep frost, you will want to ensure that your slab is properly engineered to remain level during the winter freeze.

2. The Stand, Hearth and Floor Insulation

Your floor insulation, cooking floor, and oven dome, are assembled on a hearth and stand. The concrete hearth is typically framed with wood, and poured directly on a concrete block (CMU) stand. The hearth should support the oven cooking floor at a height where you can easily place and remove food -- typically around 40 inches.

A layer of insulation, typically ceramic fiber board, such as FB Board, or insulating concrete, rests directly on the concrete hearth. The Pompeii Oven Kit provides 2” ceramic fiber board insulation under the cooking floor.

The insulating hearth serves three purposes, providing your oven with:

- A rigid platform that spans the opening between the stand's legs above the wood storage area.
- An insulation layer to stop heat from escaping through the rigid platform and down into the stand legs.
- A smooth surface on which the cooking surface will rest.

3. The Cooking Surface and Vent Floor

Pizza and bread are baked directly on the oven cooking surface, while other foods such as vegetables and roasts are placed in baking pans, or cooked on a Tuscan style grill over wood coals. The oven landing sits just in front of your oven, under the vent.

The cooking surface should be built using high quality firebricks, set on their wide side in a basket weave pattern so that the seams are staggered. This design provides a 2”-2 1/2" thick cooking surface, perfect for a home or garden oven.

The Forno Bravo Pompeii Oven Kit includes large 18”x18” firebrick tiles, which provides a high quality cooking floor with fewer seams than a stand firebrick cooking floor.

The owner or builder can also choose to install a larger oven landing in front of the oven using decorative materials such as brick, marble, decorative concrete or granite. The cooking surface is centered left and right on the hearth slab, with the oven dome built either on the cooking surface, or around it. Placement of the front edge of the oven floor depends on the depth of the oven landing, where the front of the oven butts up to the landing material.

4. The Oven Dome

The oven chamber is built as a spherical dome built using firebrick. The dome shape is designed to efficiently absorb heat from a wood fire, and to evenly reflect the heat of a live fire to the cooking surface – where it both heats the cooking floor and food. The oven is constructed using a high heat mortar (see Appendix 6).

The Forno Bravo Pompeii Oven Kit provides enough medium duty, 9”x4.5”x2.5” firebricks and high temperature, waterproof mortar to assemble the oven dome and vent.

© Forno Bravo, LLC 2007-2009. All Rights Served.

We recommend using high quality firebricks for both the oven dome and cooking surface. The firebricks that make up the dome provide a majority of the oven's ability to hold heat, and will allow the oven to deliver the high temperatures that are needed for cooking pizza.

As many oven builders have noted, the additional cost of buying high quality firebricks is very low compared with the overall cost of the project, and the labor capital that is being invested.

5. Vent

Unlike a fireplace, where the chimney is inside the firebox in the back, the Pompeii Oven's vent and chimney are outside of the oven chamber -- in the front, above the oven opening. The vent can be made from steel, brick, or cast as a refractory form. We have included drawings and directions for all three methods.

6. Vent Arch and Door

Your oven has two openings: one into the oven itself, which can be fully closed off with a door, and a second, optional opening around the vent, vent walls and vent landing. The oven opening can be constructed with with a flat angle iron or a curved brick arch, while the vent opening can be made from a range of decorative materials, including brick, stone, decorative concrete or stucco.

You can build your own door, or if you build you oven opening to a standard size, you can purchase an oven door from Forno Bravo.

7. Chimney

The oven vent is connected to either a modular double-wall steel chimney system, a steel single wall chimney system, or a refractory chimney flue liner. The type of chimney pipe you use depends on whether your installation is outside or inside, your design choice, and on your local building code. Be sure to check you local building code prior to installation.

You should use a chimney cap to minimize rainfall infiltration into your chimney and oven, and to stop sparks from leaving the chimney.

8. Dome Insulation

After the oven dome and vent have been assembled, the oven is covered with insulation, typically a woven ceramic insulating blanket, such as FB Blanket. Unlike thermal mass, where too much can be a bad thing, there isn't really such a thing as too much insulation. Woven ceramic insulation has the advantages of higher efficiency, requiring using less space, and providing better oven heat retention.

The Forno Bravo Pompeii Oven Kit provides 3" ceramic blanket insulation for the oven dome.

© Forno Bravo, LLC 2007-2009. All Rights Served.

9. Oven Enclosure

There are two basic outdoor oven designs: the Walled House and the Igloo, both of which give you a virtually limitless range of design options and finish materials. Oven structures can be designed to incorporate a range of outdoor kitchen elements, such as counters, shelves, storage, and grills.

The top half of the Gabled House can be constructed using either metal studs and concrete board, or half-wide concrete blocks (4”x8”x16”).

The Igloo is constructed using wire stucco lathe (mesh), rough stucco (scratch coat) and/or exterior finish stucco. The finish material must be waterproof.

The lower half of outdoor ovens that use a metal stand can be finished with metal studs and concrete board, and both the metal and concrete block stand can be finished to match to top of the oven.

Indoor ovens can be placed in corners, against walls, and when the oven is part of a larger re-modeling project, can be set back outside a room to make the front of the oven flush with an interior wall. Indoor ovens can easily be set behind a partition wall constructed from metal studs and concrete board.

10. Finish

Finish materials typically include stucco, brick, stone, tile, marble, travertine, and granite.

© Forno Bravo, LLC 2007-2009. All Rights Served.

Oven Dimensions

Oven Chamber Height and Opening Size

The height of the oven dome and the size of the oven opening are based the size of your oven and the style of oven you are building.

	Interior Diameter	Interior Height	Opening Width	Opening Height
Low Vault	36	14.5"	18”	10”
	42	15.5"	19”	11”
High Vault	36	18"	19”	12”
	42	21"	20”	12.5”

To visualize the curve and height of your oven dome, build a model on a flat space to get the exact measurement for the bricks you are using. Do not allow space for a mortar joint, as you will be setting the edges of the bricks facing inside the oven flush with each other.

Stand Dimensions

The size of your stand will be determined by the size of your oven, the thickness of your oven walls, the thickness of your dome insulation, the thickness of your oven enclosure and the depth of your vent landing and oven landing. Use the table below to calculate the stand dimension for your specific oven.

	42" Oven Width	42" Oven Depth	36" Oven Width	36" Oven Depth
Oven Interior	42"	42"	36"	36"
Oven Exterior	51"	51"	45"	45"
Insulation	6"	3"	6"	3"
Enclosure Wall	8"	4"	8"	4"
Vent Landing	-	8"	-	6"
Oven Landing	-	12"	-	12"
Total	65"	78"	59"	70"

The dimensions in the example above are based on a 4 1/2” thick oven dome walls, 3” FB Blanket dome insulation, 4" upper enclosure walls and a 12" oven landing. Adjust your stand dimensions according to your specific design.

Foundation

Oven size	Foundation	Block Stand
36"	67" x 78"	59" x 70"
42"	73" x 86"	65" x 78"

The foundation dimensions allow for 4" on each sides of the stand support finish materials and provide a clean reveal above ground level.

© Forno Bravo, LLC 2007-2009. All Rights Served.

Top Elevation

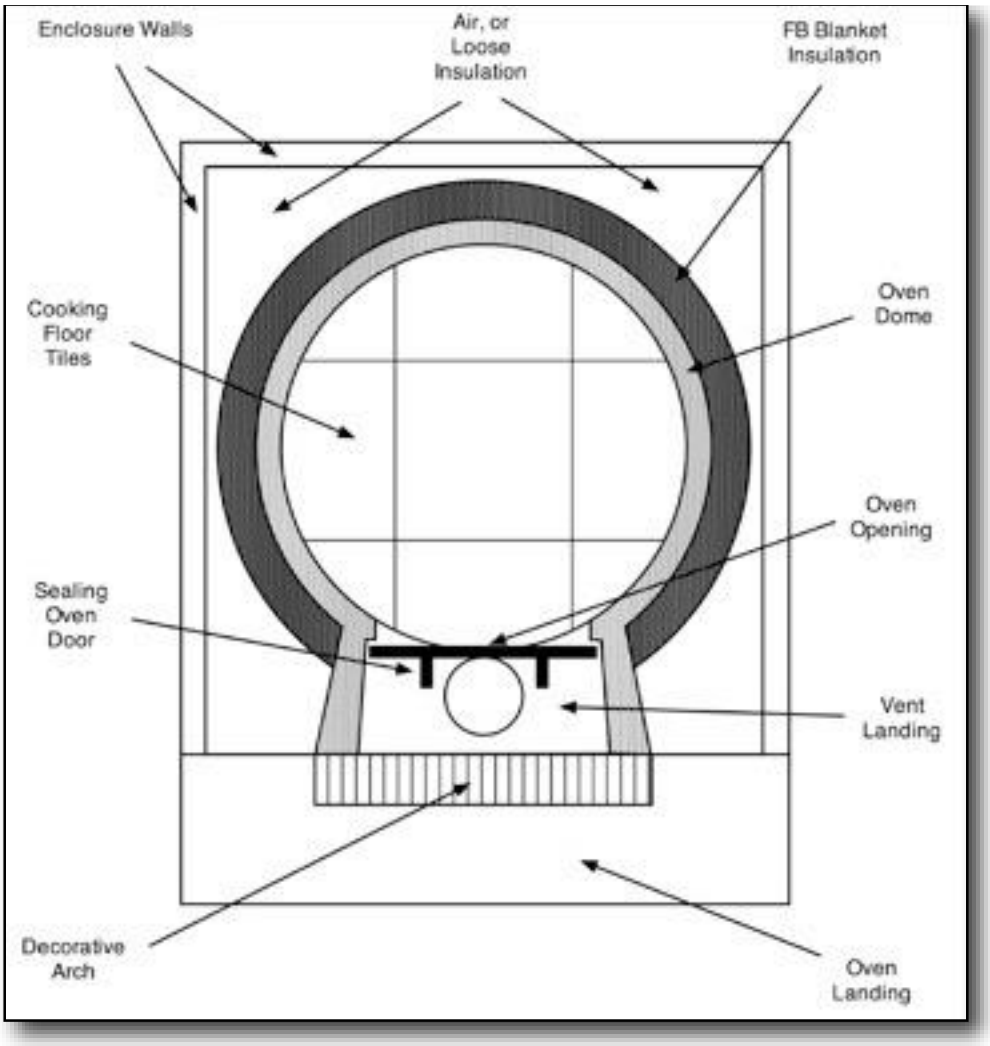

© Forno Bravo, LLC 2007-2009. All Rights Served.

Front Oven and Stand Cross Section

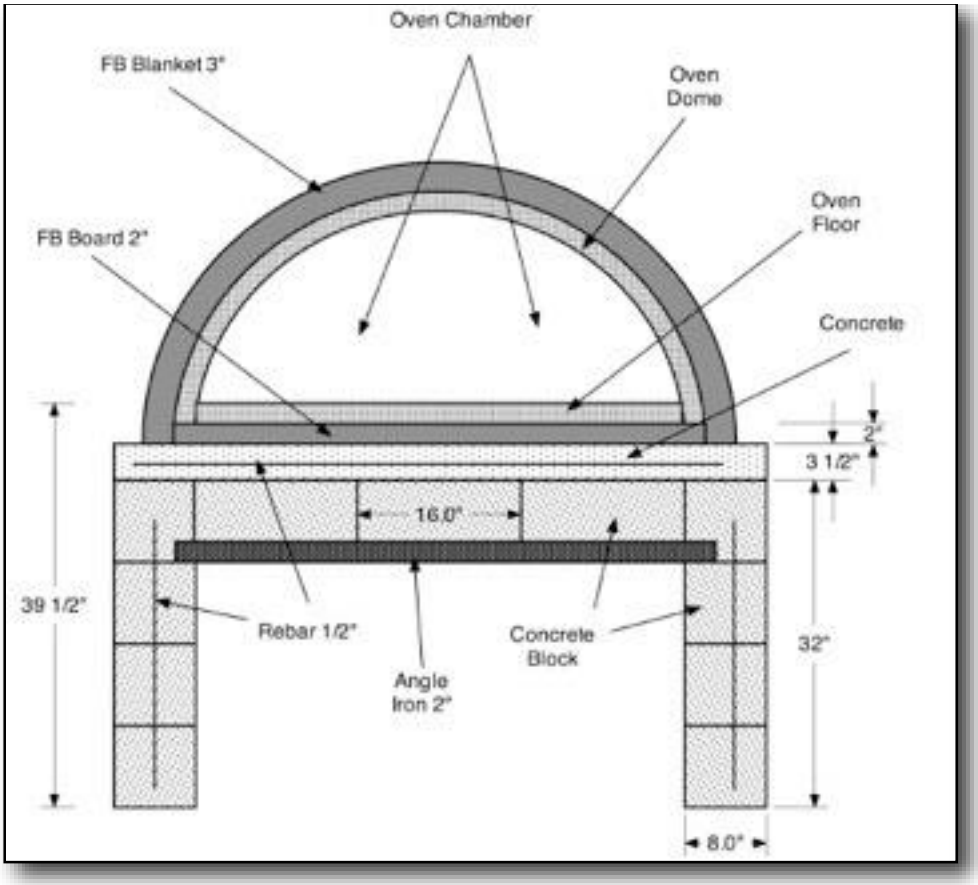

© Forno Bravo, LLC 2007-2009. All Rights Served.

Cross Section: Igloo

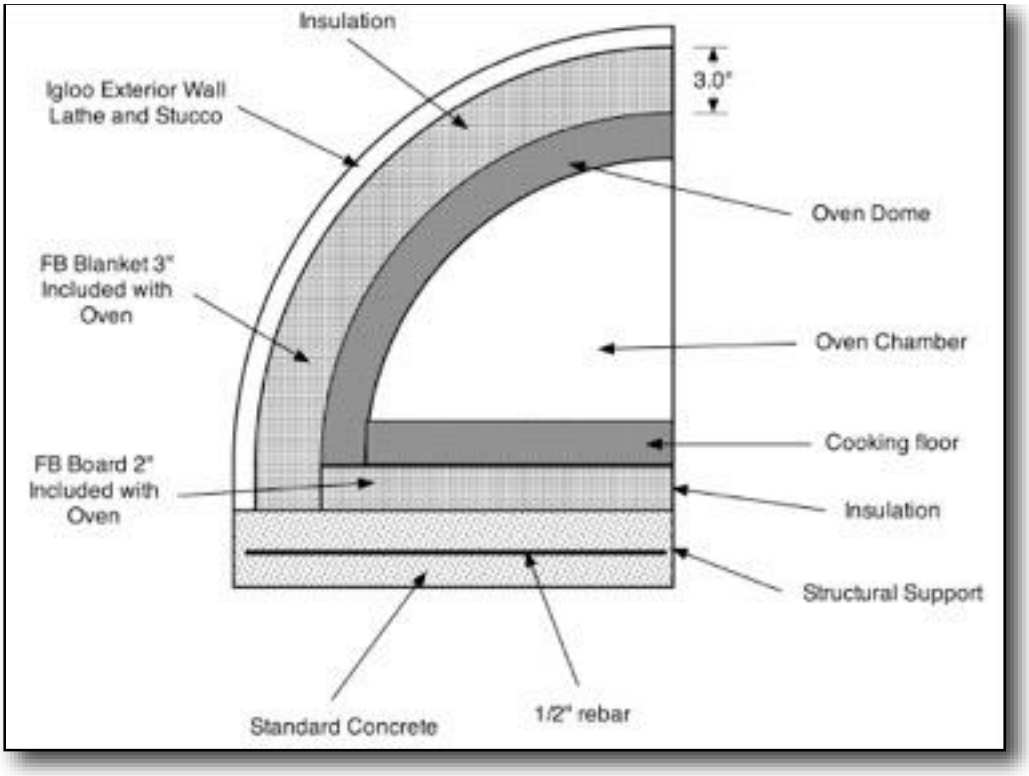

Cross Section: Walled Enclosure

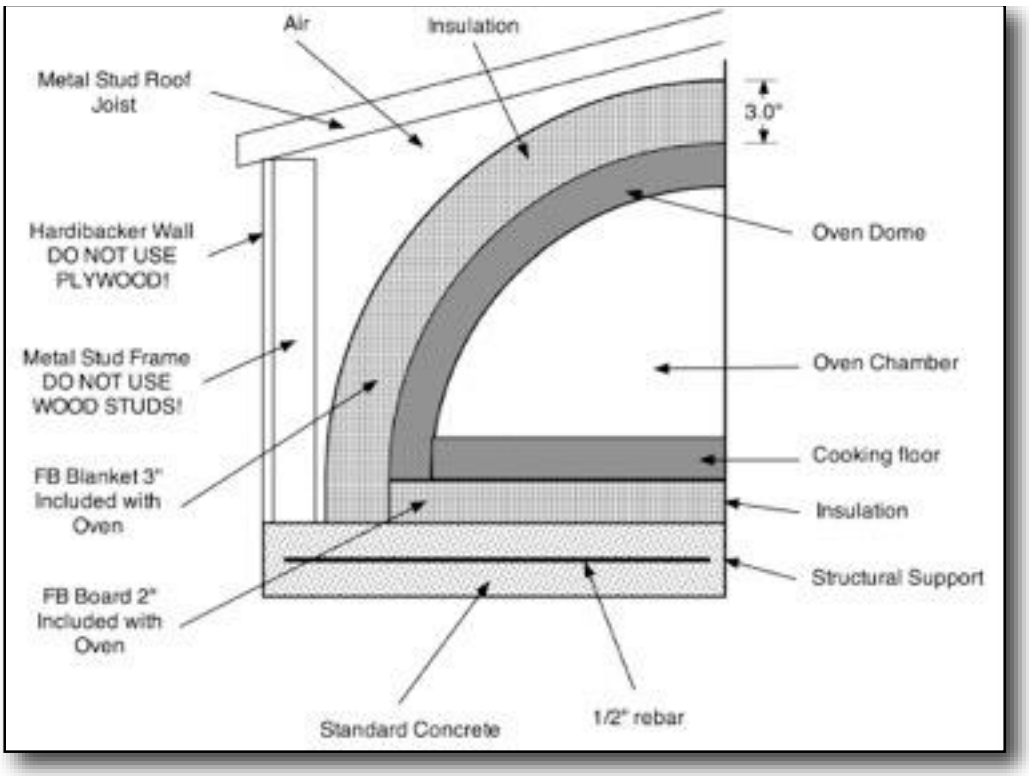

© Forno Bravo, LLC 2007-2009. All Rights Served.

Corner Installation: 35.5” external width oven

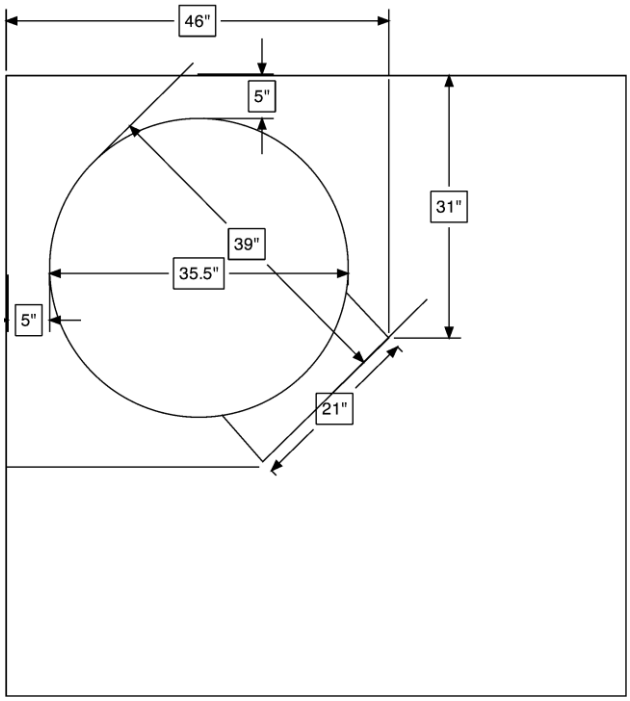

Corner Installation: 40” external width oven

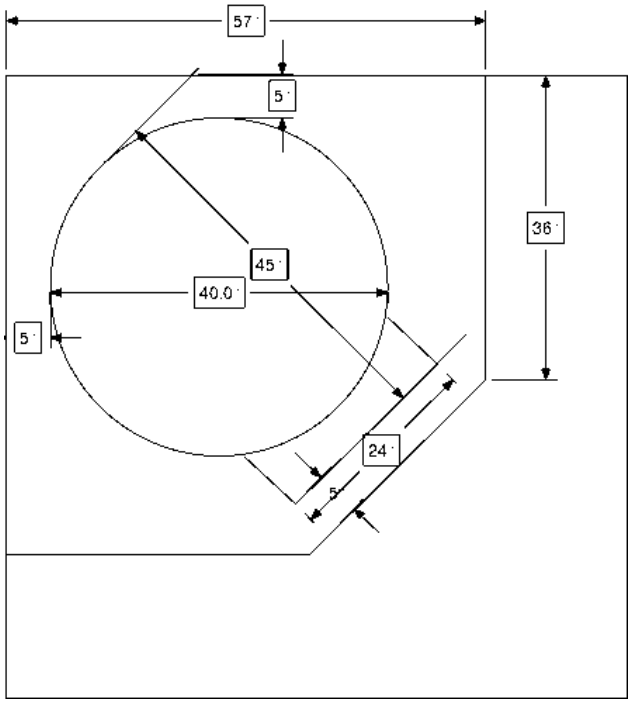

© Forno Bravo, LLC 2007-2009. All Rights Served.

Corner Installation: 43.5” external width oven

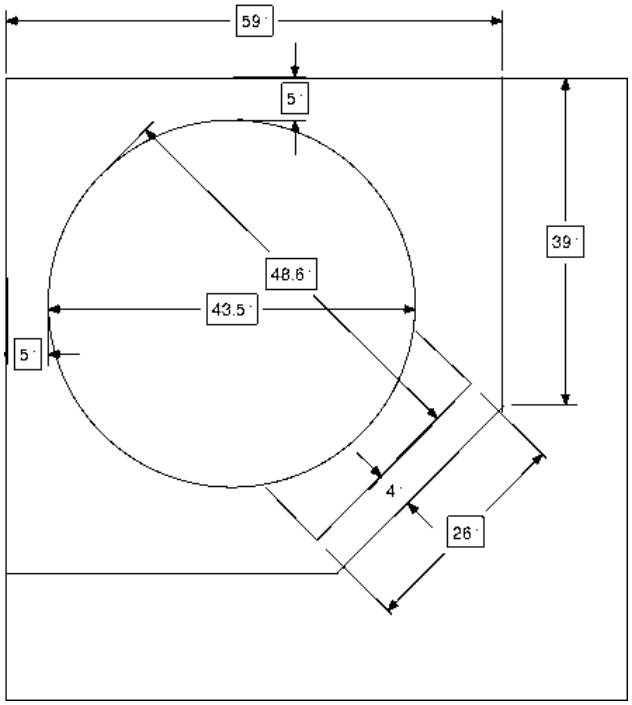

Corner Installation: 49” external width oven

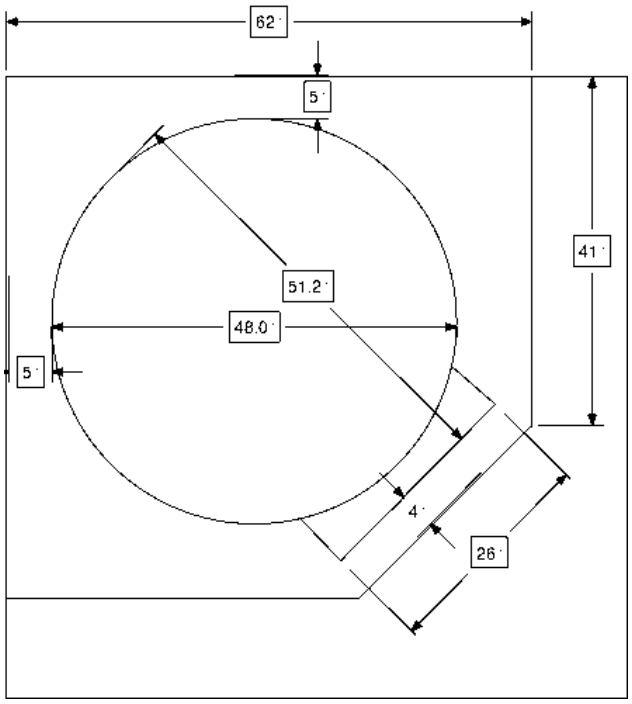

© Forno Bravo, LLC 2007-2009. All Rights Served.

1. Foundation

Overview

The Foundation Slab is exactly that -- the slab on which your oven stand and oven chamber will sit. *We recommend a minimum thickness of 5 ½ inches (14 cm) for the Foundation slab, however your location, soil conditions and local building ordinances will dictate the thickness required.*

The slab dimensions listed below are 8 " wider than the dimensions of your concrete block stand, providing you with 2" for finish material, and a 2" reveal on either side of the stand. The slab is also 10" deep, allowing for 4" in the back (2" finish and reveal), and 6" in front (the additional space makes a nice edge for your wood storage). The foundation slab will also be used to support forms that you will use during the hearth slab construction The finished top of the slab should be 2"-3" above ground level.

Instructions

First, excavate your foundation (Photo 1.1) The slab frame for a 5 ½"(14 cm) foundation is best composed of 2x6 inch lumber set so the top of the form is 2-3" (5-8 cm) above ground level. The longer form boards should sit inside the shorter boards, and the completed form can be held in place by driving wooden stakes into the ground around the perimeter. Before securing everything permanently, check to make sure the form is located and faces exactly where you want it, and is level and square.

1.1. Use a tiller to break up the soil.

Lay a 3" base of pea gravel (or crushed rock), compact the rock (Photo 1.2), and cover it with a layer of 6ml plastic sheeting to stop the slab from wicking water.

1.2. A gravel or crushed rock bed.

Place a sheet of wire mesh inside the foundation frame, and install a two-piece grid using 1/2" rebar (#4) set 4" and 8" inside the foundation frame. Tie the rebar together with tie wire, then set the wire mesh and rebar half way up the pad (2 3/4"), using either rebar stand-offs or fragments of brick (Photo 1.3).

1.3. Framed, lined, with wire mesh and rebar.

Mix and pour the concrete (Photo 1.4), and then level it. Use a 2"x4" to screed and level the concrete, then finish to

© Forno Bravo, LLC 2007-2009. All Rights Served.

a smoothness that works for you as the bottom of your wood storage area (Photo 1.5). Allow the slab to cure for a day or two. Keeping it damp will help it cure better and become stronger.

1.4 Using a mixer.

1.5 The finished foundation ready to cure.

Other Considerations

Depending on where you live, you may have to excavate 18” or more, of topsoil to reach a stable substrate such as hard clay. If you do excavate to a depth greater than the foundation form height, you will need to add a material, such as thoroughly compacted pea gravel or crushed rock, which will allow for the drainage of water from under the concrete slab. Placing a layer of plastic sheeting over the material will help prevent it from wicking water from the slab too quickly, making it brittle and prone to cracking.

You may also want to install your Pompeii Oven as part of a larger outdoor kitchen project. Use the dimensions for the oven in conjunction with your other kitchen elements, such as counters, a grill, storage, a sink, and refrigeration. You might find it easier to form your entire kitchen at one time.

1.6. A complete outdoor kitchen foundation.

1.7 The foundation and first course of stand blocks.

Hints and Tips

Use a tiller to break up the ground before you excavate. You can rent one from Home Depot. If your ground is hard and/or dry, water it with a sprinkler for a couple of days before you start. Your site should be soft, but not muddy.

© Forno Bravo, LLC 2007-2009. All Rights Served.

Compare both diagonal measurements of your foundation frame to ensure that your foundation will be square. Double check that your foundation really faces the exact direction you want you oven to face. Once the diagonals are of equal length, you may want to temporarily attach 2 x 4 lumber horizontally to form triangles at the corners and hold your form square during the pour (Photo 1.8)

1.8. 2"x4"'s hold the form square and plumb.

The weight of concrete in the foundation can be heavy (40 80lb bags or more), and mixing it by hand in a wheelbarrow might use up energy and time that will serve you better later in the project. Rent a mixer from Home Depot, and ask a friend (or pay a local teenager) to help you mix and pour the slab.

There are also mix-on-your-site trucks that come and just make as much concrete as you need on site, so you might want to price this option if available in your area.

Check with your local equipment rental company for a 1-yard mixer that you can tow behind a standard pickup truck.

If your building side it far from your street or curb, you can hire a concrete pump to shoot the concrete where you want it. The pump rental is typically a different company from the concrete delivery truck.

Remember that while the slab has to be square, level, plumb, and structurally sound to get your oven off on the right foot, it will never be seen. It is worth saving your best finish work for later in the project.

© Forno Bravo, LLC 2007-2009. All Rights Served.

2. The Oven Stand

Overview

The concrete block stand rests on the foundation slab, and provides the legs (structure) that support the insulating hearth. The hearth slab will be constructed to lie on top of the block stand and your oven dome in turn will rest on the hearth. The hearth stand is constructed using standard (8' x 8" x 16" and 8" x 8" x 8") concrete blocks. The hearth slab fits flush to the edges of the oven stand.

The first three courses of the block stand form a three-sided U, leaving an opening in the oven front that provides access for wood storage. The fourth course of blocks spans the opening at the front of the U, by resting on two pieces of 2"x2"x3/8" angle iron. Alternatively, a pre-cast lintel can be used to span the base opening. The insulating hearth, once poured, will rest directly on the fourth course of blocks. (Photo 2.1)

2.1 Angle iron supports the fourth block course.

For large commercial ovens, it might be necessary to build a third leg (supporting column) in the center of the stand to support the additional weight of the larger commercial oven and its hearth slab.

2.2. Stand with cast lintels.

2.3. A corner installation.

Instructions

Build a block stand comprised of four courses using standard 8"x16"x8" and 8"x8"x8" concrete blocks found at your local building supply store.

We recommend that you dry stack your building blocks, then after you have checked that your stand is square and level, fill every other core with concrete and rebar for stability. This approach will save you time and energy compared with mortaring each block in place, and will provide you with a structurally solid base.

Using a chalk line, mark the layout of your block stand directly on the foundation slab. Make sure that it faces exactly where you want your oven opening to face. Then, lay your first course of blocks directly on your slab. Use pre-

© Forno Bravo, LLC 2007-2009. All Rights Served.

mixed mortar where necessary to ensure that the first course of blocks is level., front and back, side to side, and on the diagonals (Photo 2.4). Take your time with this, because it will be increasingly difficult to correct problems later.

2.4. Carefully lay out the first course of blocks.

In the following courses, stagger your blocks using either 8"x8"X8" blocks, or cut blocks, to ensure that the joints are offset. Lay the next two courses, for a total of three.

After you have laid your first three courses, set your two pieces of 2"x2" angle iron across the opening between the two legs of the U shape. Note that the back piece of angle iron must be cut to allow clearance for the rest of the top course of blocks (Photo 2.5).

2.5. Cut the back angle iron to leave room for blocks.

Grind, or cut, 3/8" from the edges of each block that rests on the angle iron, so that they lie flush with the rest of the fourth course. Finish laying the rest of the fourth course of blocks (Photo 2.6).

2.6. The finished stand.

After you have completely assembled the block stand, check that the walls are square, level and plumb. Drop a section of 1/2" rebar in every other core, and fill those cores with concrete.

Variations

While our plans describe only a simple block stand, you are limited only by your imagination, and the requirements of the physical world. Some recently built variations include a round brick oven stand, and an oven with attached outdoor kitchen, including accommodations for a sink and a landing area for pizza preparation.

You can have a welder build a stand from angle iron, or you can construct a stand using metal studs.

You can form your entire stand and hearth, and pour it with concrete. Another recent variation used a brick arch to support the hearth, constructed on top of two linear foundation legs (supports).

© Forno Bravo, LLC 2007-2009. All Rights Served.

Tips and Hints

When selecting the direction your oven will face, consider making sure that your opening does not face possible winds, which might disrupt your cooking and fire management.

We recommend using angle iron and a course of blocks across the open span between the stand's legs for the top course of the stand. It provides security that the hearth will never sag, causing serious problems to your oven, and the added cost and time is low.

We also recommend dry stacking your blocks, then filling every other core (or the corners) with concrete. It's a lot faster, and sturdier as well.

Block the cores that you have not filled with your empty concrete bag to stop your hearth concrete from spilling into the holes. (Photo 2.7)

2.7. Filling the cores.

Much like your foundation, remember that while it is important that your stand is level, square, and plumb, the blocks will be completely covered with your finish material. Beautiful masonry work on your stand is not essential here.

Use a grinder with a diamond blade to remove the 3/8" from the blocks that sit on the angle iron brace across the span. It will go fast.

To fill your stand cores, mix a wet batch of concrete. Shovel it into a 5-gallon bucket, and pour it into the cores. Construct a cardboard funnel, or attach a paint pourer to the bucket to make it go fast.

2.8. Filling the cores.

© Forno Bravo, LLC 2007-2009. All Rights Served.

3. Framing the Hearth

Overview

Your oven sits on a two-layer hearth, comprised of an insulating layer that rests directly under the oven cooking floor, and a structural layer that hold the oven in place. The insulating layer stops heat from leaving the oven through the cooking floor, and is made from either 2” ceramic fiber insulating board (FB Board), or 3 ¾” or 4” of insulating concrete (vermiculite or perlite mixed with Portland cement). The structural layer is comprised of either 3 ½“ of rebar reinforced concrete, or a fabricated metal tray.

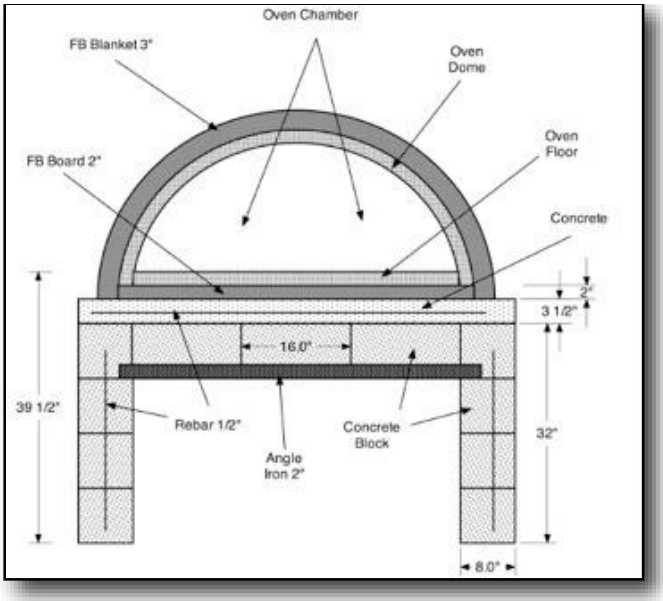

This drawing shows an FB Board hearth design.

A significant decrease in the cost of FB Board make it the recommended installation option. Ceramic fiber board is more efficient than insulating concrete, it is much easier to install, and is priced very similarly to vermiculite concrete. The Forno Bravo Pompeii Oven Kit includes FB Board.

For FB Board installations, the structural concrete layer can be poured in a form built from 2”×4” lumber (38×235 mm) and either 3/4" plywood or concrete board to form the bottom of the hearth.

For installations that will use vermiculite concrete for insulation, the structural concrete and insulating concrete are poured in two layers in a single form built from 2”×8” lumber (38×235 mm) and either 3/4" plywood or concrete board to form the bottom of the hearth.

Thermocouples

If you are planning on using one or more thermocouples in the hearth and/or cooking floor, you need to add them now. You can either include the actual thermocouple wire in the hearth when the concrete is poured, or you can use a straw to create a chamber where you will run the thermocouple wire later. (See Photo 3.4)

Instructions

The hearth form consists of a bottom tray and the frame sides, which will hold the concrete hearth as it is poured. After the hearth has cured, the form is removed (and usually becomes part of the first fires that will cure your oven).

Support for the Tray

First, using 2 "x 4" lumber set on its side, build the frame for the bottom of the form. The frame should be roughly 3/8" smaller than the opening of your block stand, so that it can be easily removed after the hearth has cured. (Photo 3.1)

Next, cut (12) lengths of 2"x4" that will serve as the legs that hold the bottom frame in place inside the stand opening. You will use 1/4" shims to accurately set the top of the frame. The top of the 2”x4” frame should be about 1" below the top of the stand (to allow for the 3/4" plywood and shims). Measure and cut your 2”x4” legs accordingly -- stand height, minus 2 1/2" (1 1/2" for the 2”x4” and 1" for the plywood and shim).

© Forno Bravo, LLC 2007-2009. All Rights Served.

3.1. The form support ready for the tray.

Set two 2" x4" legs at each corner and one in the middle of the span, then lay the frame on top. Place shims between the legs and frame, and then tap the shims to raise the frame up until its top is 11/16" (the true thickness of 3/4" plywood) from the top of the stand. After the bottom tray is built, you will add more 2“x4” legs to support the center of the tray (Photo 3.2).

3.2. Form supports.

The Bottom Tray

The bottom of the hearth form can be build using either plywood, which must be removed, or with Hardibacker, which can be left in place.

To form the tray bottom using Hardibacker, cut the backer board to rest on top of the concrete block stand, supported by the form supports. Leave a few inches of space between the backer board and the outside edge of the stand to allow concrete to fill into the cores of the stand blocks.The concrete hearth will be poured on top of the backer board, and the backer board will stay in place, becoming the roof of the oven wood storage area.

3.3. Hardibacker inside the side forms.

To form the tray with plywood, cut two sheets of plywood lengthwise to fit into the opening (3/8" shorter so that it will easily come out later), and lay it on the frame. Tape the joint with masking tape. Set your last two 2"x4"legs supporting a 2"x4" on its side directly under the joint, which will support the weight of the wet hearth while it is curing. Shim to level.

To prevent the concrete from bonding to your forms you can either get a commercially available release agent (usually a spray) or use a homegrown method of vegetable oil, which may render the plywood useless for other projects.

© Forno Bravo, LLC 2007-2009. All Rights Served.

3.4. Plywood set in place.

The Side Forms

Next, build the sides of the form using 2”x4” or 2”x8" lumber (depending on the type of insulation you are using) to fit around the block stand edges. This frame forms the sides of your 3 1/2” or 7 1/2 " insulating hearth. Set the boards at the top of the outer edge of the block wall, and support them with 2”x4” legs and shims similar to the tray. Check for level. (Photo 3.4).

3.5 Form sides held in place with 2”x4”’s.

Rebar

Build a grid using 1/2” rebar on 12” centers. The rebar should stop a few inches short of the form side, and it should be supported at the mid-point of the concrete hearth (roughly 1 3/4”). Tie the rebar intersections tightly with rebar wire. The rebar should remain in the middle of the heath and not be exposed at the ends during the concrete pour.

3.6 Ready to pour.

Tips and Hints

Cut your frame and plywood for the bottom of the hearth form about 3/8" shorter than the actual opening. The concrete will not escape when you pour, and it will be easier to remove the form when your hearth has cured.

Use shims to set the bottom form level with the top of the block stand. It will be easier to make the form level with the top of the stand, and it is easier to remove it when the hearth has cured.

To stop the top form from bulging out under the weight of the concrete, use either (2) 2"x4"'s nailed in place on the top of the form in one direction, and nailed in place and angled to the ground in the other direction.

Alternatives

Island Hearth

Some builders want use their oven for baking multiple batches of bread from a single firing. In this application a little extra thermal mass in the floor will allow longer cooking times at elevated temperature. This can be accomplished by using what is called an isolated hearth. A ring of refractory concrete in poured to the same diameter of the dome about 1 1/2” thick, or an island of firebricks is set

© Forno Bravo, LLC 2007-2009. All Rights Served.

under the cooking floor. You may either pour extra insulating concrete around the island or leave it elevated. You may also use firebrick splits (1 1/4") to increase the mass (Photo 3.7). You may “sink” your island into the insulating layer, but take care to not reduce your insulating layer to less than 3 1/3 inches.

Take care with the additional mass under the oven. The extra mass is only necessary for very high quantity bread baking. All Pompeii Ovens built using a standard 2”-2 ½” firebrick cooking floor are capable of retaining enough heat for roasting a turkey, or baking multiple loads of bread, from a single firing. If you are not going to be baking very large volumes of bread, you do not need, the extra mass under the oven floor.

3.7. Firebrick splits under the cooking floor.

© Forno Bravo, LLC 2007-2009. All Rights Served.

4. Pouring the Hearth

Overview

In this step you will pour the concrete hearth and then either install FB Board or pour a second layer of insulating concrete.

Instructions

For installations using FB Board, mix and pour the 3 1/2” concrete heath.

4.1. Rebar set in center of the concrete pad.

You can place the FB Board on the concrete hearth at any time—while the concrete is damp and still curing, or after it is fully cured. The weight of the oven will hold the ceramic fiber board in place, and you do not have to use adhesive.

4.2. FB Board on damp concrete.

For installations using insulating concrete and a 7 1/2” form, draw a line 4” down from the top of the frame to mark the top of the structural concrete layer.

Double check that you have a grid of 1/2" rebar slightly shorter than the external dimension of the wood forms, on 12" centers, starting 6" in from the edges of the form, set half-way up the 3 1/2” concrete layer (about 1 3/4”). Then, pour the 3 1/2” layer of structural concrete. See Photos 4.3 and 4.4.

4.3. Rebar set in center of the concrete pad.

© Forno Bravo, LLC 2007-2009. All Rights Served.

4.4. Structural layer waiting on insulating layer.

Prepare the insulating concrete using a ratio of 5 parts vermiculite to 1 part Portland cement (5:1). Thoroughly mix the vermiculite and Portland cement when they are still dry, then add water and mix until you reach an oatmeal consistency. Pour the insulating material to the top of the form.

If you will be building a landing in front of your oven opening, it is not necessary to pour vermiculite concrete all the way to the front of the hearth. Rather, you can end the form where your oven vent will begin, and only pour vermiculite directly under the oven chamber and vent area. Fill the form under the landing in front of the oven with standard concrete (Photo 4.6).

4.5. Insulating concrete on top ready to cure.

4.6. Vermiculite concrete poured under the oven chamber.

Tips and Hints

We recommend mixing your vermiculite concrete by hand, rather than in a mixer, which tends to break the vermiculite up and reduce its efficiency. It is a light mixture that is easy to work with. Dry mix the vermiculite and Portland cement, so that the cement covers the vermiculite, then add water until you reach an oatmeal-like consistency.

© Forno Bravo, LLC 2007-2009. All Rights Served.

5. Setting the Cooking Floor

Overview

Your cooking floor can be made from either standard 9”x4.5” firebricks, set in an offset or herringbone pattern (Photo 5.1), or from the 18”x18” floor tiles provided with the Forno Bravo Pompeii Oven Kit. The advantage using a standard firebrick floor is that it is made from materials you can purchase locally, while the advantage of the larger floor tiles is that they present fewer seams for catching oven tools, such as pizza peels and rakes.

As an option, you can cut the firebrick floor to fit inside the oven dome, rather than having the oven dome rest on top of the cooking floor. The advantages of this approach are that it allows you to replace a broken or worn out floor tiles, and it offers better thermal performance. A majority of Italian ovens (including the Forno Bravo ovens) fit the oven floor inside the dome. The disadvantage is the you have to cut a number of bricks to fit inside the round oven dome and the oven landing walls.

5.1 A herringbone pattern.

Instructions

These instructions show how to build a cooking floor using firebricks. With this method, you do not mortar the bricks in place, but rather spread a thin layer of paste made from sand, fire clay and water as a "bed" for the floor.

To make the underfloor paste, mix 1 part of fine sand with 1 part fireclay, then add water until you reach the texture of a sticky mortar (but without the cement). Spread the underfloor using a notched trowel as the ridges will make it easier for you to get your floor perfectly level (Photo 5.2). The process is similar to setting ceramic tiles.

5.2 Ready for the cooking floor

Measure your hearth to ensure that you are centering your cooking floor left and right on the hearth. How far back you set the cooking surface will depend on the size and material you are using for the oven landing in front of the oven opening. Use a chalk line and measuring tape, locate and mark the center of the oven, and where the front of the oven (the vent floor) will meet with your oven landing (Photo 5.3).

5.3 Measure carefully where the oven will sit.

© Forno Bravo, LLC 2007-2009. All Rights Served.

Laying your floor in a herringbone or offset pattern to will help avoid having seams line up that will catch your pizza peel. Build the floor out and back until you have gone far enough to hold the oven wall. Lay your bricks on their flat side, as close as possible to the next brick, avoiding letting sand, clay or grit get in between, which will keep your bricks from touching each other. Tap the floor with a rubber mallet until it is smooth and level (Photo 5.4.).

5.4. The cooking floor set and ready to go.

Check again for level, because this is your true cooking surface. Finally, mark the location for the oven dome and landing to prepare for the next step. Locate the true center of your oven using a tape measure and chalk line (Photo 5.5). Using a string and pencil, mark a circle the size of the inside of your oven. That is where you will set your oven walls and dome.

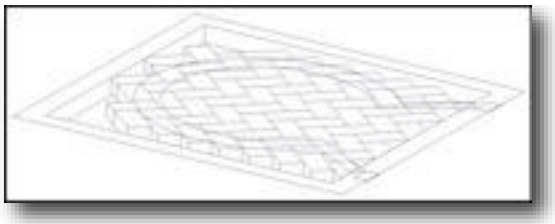

5.5. The oven and vent marked on the cooking floor.

5.6. The cooking floor with the first course laid out.

Tips and Hints

If possible, hand select your cooking floor bricks for quality, ridges and chips, and use the best you have for the cooking floor.

If you do end up with ridges that catch your peel, you can grind them out later.

© Forno Bravo, LLC 2007-2009. All Rights Served.

6. Starting the Oven Dome

Overview

The top of the Pompeii oven is a circular spherical dome built from firebrick. The dome shape is designed to efficiently absorb heat from a wood fire, to evenly reflect stored heat, and to reflect heat from a live fire inside the oven down to the cooking surface.

Graphic 6.1 provides a good overview of the dome layout, including the first chain of upright bricks, the curve of the dome, and side view of the oven opening.

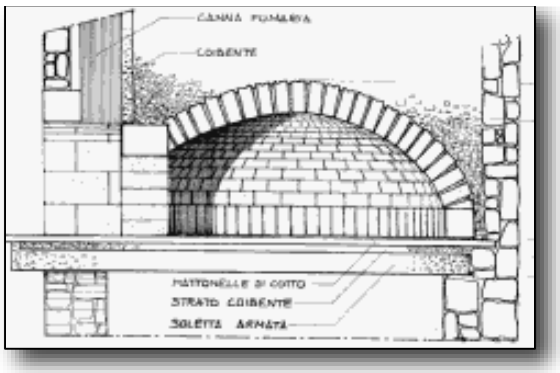

6.1 Inward dome curve.

To Form, or Not to Form.

There are three fundamental methods for constructing the oven dome: the first is a free-standing dome, where chains of self-supporting brick circles are built on top of one another (Photo 6.2); the second uses a set of Styrofoam vanes that you cut to your dome profile, place inside the dome, and then removed after the dome is completed (Photo 6.3); and the third entails building a dome shaped form using wet sand, then mortaring your bricks in place as they lay against the form (Photo 6.4).

Here are three photos showing the different approaches:

6.2 No forms.

6.3 Styrofoam forms.

6.4 Sand form inside first course for bricks.

© Forno Bravo, LLC 2007-2009. All Rights Served.

Advantages of not using a form for the first 6 to 8 courses:

- It is a relatively easy and very time-efficient method.
- The brickwork is accessible from the inside as the dome is being built.
- You can continually clean the inside of the dome brickwork, which will result in a better-looking end product.
- Finally, this approach reduces the risk of something going wrong. Simply put, you know the entire time that you are working that your oven dome is standing, and will continue to stand. If the builder uses the forms to hold up the bricks, rather than using the forms as a placement guide there is a chance that the brickwork will not be self-supporting. You will need to support your rings, also called chains, once the arch of the dome is more pronounced at chain 8.

The freestanding dome approach builds on itself, where the first few chains are not difficult to build, giving the builder the experience and self-confidence necessary to continue through the subsequent chains.

An experienced mason can build the entire dome without using any type of form.

Advantages of using a form from start to finish:

- Forms help maintain the desired profile throughout the laying of the chains.
- Before you add mortar to the brick you can rest the chain on the form to help visualize how that chain will be laid.
- Most amateur brick builders have found the foam vanes, about 8, help in maintaining the profile while not allowing the bricks to rest on the foam.
- This method has been the preferred method of amateur builders.

To further explore the pros and cons of the different methods further, before you start you oven, join the Forno Bravo Forum, to find out what other builders have done, and what they think.

About Your Brick

We recommend using medium duty firebrick for both the oven dome and cooking surface. The dome firebricks provide a majority of the oven's ability to hold heat, and will allow the oven to deliver the high temperatures needed for cooking pizza. Read our Brick Primer (Appendix 2) for more background information on bricks.

The firebricks we provide with the Pompeii Oven Kit are optimal for brick oven use. The Forno Bravo firebrick and cooking floor tiles are 38% alumina, 134 lb./cu. ft. density, and are rated to 2,500ºF. During the manufacturing process they are compressed (2,700psi) and kiln fired (2650ºF), ensuring both good cooking performance and durability.

6.5 Two firebricks

Much of the Pompeii Oven dome is constructed using a standard size brick (2 1/2" x 4.5" x 9") cut in half. The cut side of the brick faces out, away from the inside of the oven, allowing the clean, manufactured side to face in where it will be seen. Depending on the brick type and size you choose, the thickness of your oven dome will be between 4" - 4 1/2", which is high, but an acceptable amount of thermal mass for a home oven.

© Forno Bravo, LLC 2007-2009. All Rights Served.

For extreme bread baking applications, the dome can be coated with 1/2"-1" layer of either refractory mortar or fire clay mortar, further increasing the oven mass. Still, this is something we only recommend for very high production bread baking requirements.

Brick Cutting

There are three basic methods of cutting the bricks for your dome:

- You can either purchase an inexpensive tile saw or rent a tile saw. Most rentals charge an additional amount for the wear of the blade. Make sure you know the rate; it is usually based on a micrometer measurement before you rent and when you return it. One builder did not use enough water and forced the saw to cut rapidly through the bricks, and as a result, his charge for blade wear was almost what it would have been to purchase an inexpensive saw. If you are going to be doing some remodeling, as well as your oven, you might invest in an inexpensive tile saw. Remember to save the mud from the cutting that has settled to the bottom of your catch basin, from the cutting. It is a perfect source of firebrick clay (no cement), which is used under the floor of the oven.
- You can use a diamond-coated masonry blade on a standard circular saw or grinder. This creates massive amount of dust, which is very abrasive on the saw motor. You should wear a dust mask.
- You can score your bricks and break them. This takes practice, but it saves the cost of worn out diamond blades, and it holds dust to a minimum. This method works for dome bricks that have one outward facing side that will not be seen, and can be rough. With a pair of safety glasses a mask and a hammer you can have the kids hammer the chips down to “sand” for firebrick clay.

Although it won't help at the core of the brick you can also let them soak in a bucket of water for a few minutes before you cut them. This will reduce, but not eliminate, the dust problem.

To reduce the amount of mortar required to build your dome, one option is to use tapered bricks. You will need for more brick, because all four sides of each brick will need tapering. For a more advanced approach one builder has gone with a geodesic Pompeii dome, dmun's 36" geodesic oven.

Oven Dimensions

We recommend either a 36" or 42" (internal diameter) round oven, using either a high (Tuscan), or low (Neapolitan) vault design. These sizes provide you with enough oven space to cook multiple pizzas at a time, or to cook a roast with multiple side dishes, without being too large or difficult to build, or too slow to fire. The trade-offs between the two oven styles have been described above, and will help you decide which oven to build.

	Interior Diameter	Interior Height	Opening Width	Opening Height
Low Vault	36	14.5"	18”	10”
	42	15.5"	19”	11”
High Vault	36	18"	19”	12”
	42	21"	20”	12.5”

The Oven Opening Dimensions

The basic trade-off a builder faces when selecting the oven opening size is balancing ease-of-use for getting food in and out of the oven along with the size of pans, oven tools and roasts you want to use vs. your oven's ability to hold and retain heat. The larger the opening, the easier it is to work with the oven, and the more your oven will lose heat. A small opening will enable your oven to hold its heat well, but can limit you from using your favorite terra cotta pan, or a nice large pizza peel. The opening height and width we recommend here should work well for a majority of builders.

© Forno Bravo, LLC 2007-2009. All Rights Served.

7. Building the Dome

Overview

At this point, you have reached a decision on the type of dome you want to build, the size of your oven, and the type of forms you will be using,. You are now ready to start building your dome. The next decisions are first, to determine the orientation of your first course of bricks. The first course will determine not only the size (internal cooking floor diameter) of your oven, but also the shape and inward curve of the dome. And second, you must decide on the type of high heat mortar you will use.

The First Course

The dome itself is a series of self-supporting circular brick chains that curve inward, until they meet at the keystone at the oven top. The first chain is a ring of brick cut in half and standing on their ends, with the thin edge (2 1/2") facing inside the oven. You can adjust the exact diameter of your oven to match the size circle that your bricks form, so that you do not have to cut a brick in your first chain.

7.1. First course a half brick set upright.

The first course can be oriented in three ways. First, you can stand a brick cut in half upright (4 1/2"), as show in Photo 7.1. Second, you can lay a half brick on its side (2 1/2"), as shown in Photo 7.2. Finally, if you are building a Naples-style oven, you can assemble the first course with a full height brick standing upright (9"), as shown in Photo 7.3. There is no right or wrong way to start your oven. Once you decide the style oven you want to build, you can decide which first course method works for you.

7.2. First course with a half brick on its side.

7.3. A full height brick upright in the first course.

HIgh Temperature Mortar

The oven is assemble using mortar designed to withstand both the heat of a wood-fired ovens, along with constant heat up and cool down (expansion and contraction) cycles that will break down standard masons mortar.

There are three options when deciding which high temperature mortar to use. The Forno Bravo Pompeii Oven Kit contains a dry, pre-mixed refractory mortar designed for high heat environments. It is a calcium aluminate-base mortar that does not use Portland cement (which breaks down under high temperature cycles) as a binder, and uses refractory aggregates.

© Forno Bravo, LLC 2007-2009. All Rights Served.

A lower-cost option is to mix a modified Portland cement mortar, using fire clay, sand and lime. While the homemade mortar will not be as durable as a true refractory mortar, the addition of fire clay to the mix gives it improved heat resistance compared to standard mortar and it is inexpensive.

A third option option is to purchase a different brand of refractory mortar from your local masonry supply store.

Finally, makes sure that you do not use a wet, premixed fireplace mortar with water-soluble binder. There are a number of mortar brands designed for in-door fireplace installation, where the mortar does not cure to a fully-cured, waterproof state. This is the wrong product for pizza oven installation.

The Second Chain

Subsequent chains are made up of brick cut in half and set on their wide edge (4 1/2") with the clean edge facing in. The angle of the inward curve is set using a standard wooden shim that you cut to the necessary angle. To determine the angle of your oven's inward curve, and of the shim itself, build a trial layout, and cut your shim accordingly (Photo 7.4).

7.4. Cut your shims to match the trial dome layout.

Do not allow for an inside mortar joint, as you will be setting the edges of the bricks facing inside the oven flush with each other.

Before you mortar the bricks in place soak them in a bucket of water. Firebricks are more porous than clay and will dry out the applied mortar quickly if they are not moist. Cement cures through a chemical process that creates heat. If the surrounding moisture content is too low the mortar will cure too quickly and will not have the proper mechanical properties such as strength. Remember, you want cement to cure, not dry out, so starting with wet bricks and keeping completed masonry damp is a good thing.

Begin laying your bricks using high heat mortar. The bricks will follow the angle and curvature set by the wood shim. After the angle is held in place with mortar, remove the shim; fill the open space created by the shim with mortar, and move on (Photo 7.5).

7.5. Using a shim to shape the dome without forms.

Subsequent Courses

Stagger the brick joints, course to course, much like the brick you see in block walls and brick houses (Photo 7.6). There will be bricks in the first chain that line up with the wall brick. This is normal. However, on the chains they should all be offset.

© Forno Bravo, LLC 2007-2009. All Rights Served.

7.6 Three chains; no forms.

7.7. A keystone locks each course in place.

7.8. Six chains, with forms.

Start each chain either next to, or over the oven opening. This will allow you to set your keystone where it cannot be seen when you look inside the oven. The keystone is a specially cut brick that locks each chain into place. When you reach the end of each chain, where you cannot fit the last full-size brick, make a paper template of the piece that is required to finish the chain. Transfer the template to your brick, and make your cut. The keystone should be tight, and require that you lightly tap it into place, but not so tight that it causes the rest of the bricks in the chain to shift (Photo 7.7).

7.9. Closing in.

Tips and Hints

There are three ways of cutting the bricks for your dome: you can either purchase an inexpensive tile saw, or rent one; you can use a diamond-coated masonry blade on a standard circular saw or grinder (see Appendix 1 for more information); or you can score your bricks and break them.

Read our high heat mortar section (see Appendix 6) for more information.

© Forno Bravo, LLC 2007-2009. All Rights Served.

The Indispensable Tool

A number of Forno Bravo Forum members have developed an excellent tool for keeping chains of bricks round and level. Known as The Indispensable Tool, this homemade guide attaches to the center of the oven floor and rotates to constantly check the location of each bricks. For more information, check the Forno Bravo Forum.

© Forno Bravo, LLC 2007-2009. All Rights Served.

8. Building the Oven Opening

Overview

There are four traditional ways for framing your oven opening, though we recommend the first, and easiest method. The simplest, fastest and least costly way of framing the oven opening is to use fire bricks to frame the sides of the opening, and a length of 2"x 2"x3/16" angle iron to support the top of it.

8.1. An angle iron framed opening. Note the lack of a reveal for the door jam (don't do this).

The other methods are:

- Build a curved arch using a form and bricks to frame the opening (Photos 8.2, 8.3, and 8.4).
- Build (or having a metal fabricator build) a complete doorframe and vent, either from steel or cast iron.
- Frame the opening with a stone or precast lintel.

The curved arch method is beautiful, but difficult to build. Having a welder make a doorframe that also integrates your oven vent is something you might want to consider if you have access to a good fabricator. The stone lintel approach is authentic, and will look great, but you are on your own when it comes to finding the right material, and it can be tricky making your brick oven work with the non-straight lines of the stone.

8.2. An arched oven opening.

8.3. The intersection between the dome and opening.

8.4. A form shapes oven opening.

© Forno Bravo, LLC 2007-2009. All Rights Served.

8.5. A cast lintel forms oven opening.

We recommend that you set back the vent side bricks back 1/2" to allow for a reveal that you will use to "form" the opening into the oven. You need to leave a lip that your door can close tightly against, fully sealing heat and steam inside the oven chamber, and completely cutting off the air supply.

8.6. The entry arch and vent has a clearly defined door stop.

Tips and Hints

You can use The Indispensable Tool to determine the inward curve of the oven opening bricks. Mark the bricks using a pen attached to The Indispensable Tool.

8.7 The Indispensable Tool.

© Forno Bravo, LLC 2007-2009. All Rights Served.

9. Finishing the Oven Dome

Overview

If you have chosen to build your oven with forms, there may come a time when you are no longer confident that the mortar you are using to attach your bricks will keep gravity from taking over, causing your next chain of bricks to fall in before you can set the keystone. If it looks like this might happen to you, it is time for you to use an internal support to hold the last few chains in place while the keystone is set, and the mortar dries.

There are several options for building this form, including plywood, Styrofoam and a rubber ball. This section describes the process of putting a form in place, cutting and setting the last chains for brick, and then cutting and setting the keystone to complete the oven dome.

Building the Form

Because you will set the form in place through the oven opening, you need to cut your form into pieces that will fit through it.

Cut a circular piece of plywood to the circumference of the opening at the top of your oven, and slide it into the oven. Hold the round form directly underneath the opening at the top of the oven, and measure the distance from the bottom of the form to the top of the oven floor. Cut three lengths of 2"x4" or similar material to 1/2" shorter than that length. Holding the form in place using one of the lengths of 2"x4", push in a shim to make the form stay in position. Use the next two lengths of 2"x4" and shim to make everything secure.

Photos 9.1-9.3 show different ways of supporting the last few chains.

9.1 A removable form inside the oven.

9.2 A ball as a form

9.3 No forms (this is difficult)

© Forno Bravo, LLC 2007-2009. All Rights Served.

After you have set your final bricks, and the mortar holding them has dried, you can remove the shims, and slide the pieces of the form back out the oven door.

Closing in the Oven

The last 2-3 chains rest on a form. Cut your half bricks into quarters, giving you brick pieces that are roughly 2"x2"x4 1/2". Then, cut a series of wedge bricks to fill in the chain. Make a template for the keystone and tap in place to lock in the chain. Continue with your last few chains until you are down to a single brick that will close in your oven.

9.4. Styrofoam forms.

The Final Keystone

The final keystone is the brick that locks the entire oven dome in place. Custom cut it to fit snugly into the opening (Photo 9.5). The keystone will be angled in on each side, but should remain the 1/2 brick (about 4 1/2") depth of the rest of the oven dome.

Tap the keystone into place and cover with mortar.

9.5. The perfect keystone.

9.6. From the inside.

9.7 From the outside.

© Forno Bravo, LLC 2007-2009. All Rights Served.

Option: More Thermal Mass

You do not need to add thermal mass to your oven at this point, because the mass of the bricks and the mortar you have used to hold it together are more than sufficient for backyard pizza baking (or even restaurant pizza baking for that matter). If you plan on baking large volumes of bread, and want your oven to retain enough heat to bake multiple batches of bread from a single firing, you can add additional mass by applying 1/2”-2” of high heat mortar to the outside of the oven.

© Forno Bravo, LLC 2007-2009. All Rights Served.

10. Oven Vent

Overview

Unlike a fireplace, where the chimney is inside the firebox in the back, the brick oven's vent and chimney are outside of the oven -- in the front. There are several different, and widely used methods for constructing the vent system for your Pompeii Oven.

1. A Steel Vent

Have a steel vent fabricated, which can be attached to the oven enclosure and connected to a steel double wall chimney system, such as Simpson DuraTech, or a refractory chimney flue liner. The steel vent can either be fully enclosed, using either brick or metal-stud and concrete board walls, or it can be left open, giving you an unobstructed oven landing area. The fully enclosed vent landing can be finished with it's own decorative arch made from brick or stone.

The vent itself can be hidden behind decorative material, or if you like the metal vent look, you can have an attractive vent fabricated, and left on display. Photos 10.1 to 10.9 show the various venting methods.

10.1. A fabricated metal vent.

10.2. The vent attached to a terracotta chimney and fully enclosed.

2. A Brick Vent

Use one or two course of firebrick to construct vent walls and the arch that contains the vent opening. Build your vent walls first, then using a wood or Styrofoam form, build the arch, cutting the center bricks to leave a vent opening.

Depending on the type of chimney system you are using, you can either leave a roughly 6"x10" opening for use with a rectangular refractory chimney flue liner, or a 9 1/2" opening for an 8" Simpson DuraTech Anchor Plate.

© Forno Bravo, LLC 2007-2009. All Rights Served.

10.3. A brick vent.

10.4 Another brick vent.

10.5. Construct the form using plywood.

3. A Cast Concrete Vent

Construct a wooden form the shape shown in Photos 10.5 and 10.6, leaving a 9 1/2" hole to attach the DuraTech Anchor Plate. The upper width of the vent is roughly 14”x14”, while the bottom of the vent will depend on the width of your vent landing area. Add chicken wire to give the vent structural integrity. Pour the vent, and allow 2-3 days for the concrete to dry before you remove the form.

© Forno Bravo, LLC 2007-2009. All Rights Served.

10.6. A cast vent.

Then, build vent walls using standard bricks that will support the vent. Set the vent walls back 1/2" from the oven opening to leave room for the oven door to meet flush with the opening. Connect the DuraTech Anchor Plate to the vent, or mortar a clay flue liner to the vent. You can finish the entire vent assembly with a decorative, non-structural, brick arch. Graphics 8-11 show this technique.

10.7. The cast vent set in place with brick vent walls.

Tips and Hint

The metal vent can either be attached to the oven enclosure without support walls, a style that leaves the landing in front of the oven opening fully open. Or, it can be fully built-in and supported by vent walls made either from brick, or from a metal stud and concrete board wall. There is no right or wrong method. Pick the design that works with how you will use the oven and the design that works best for you. If you choose to enclose the vent with walls, make sure you have a workspace near the oven opening for setting down pizzas and baking dishes.

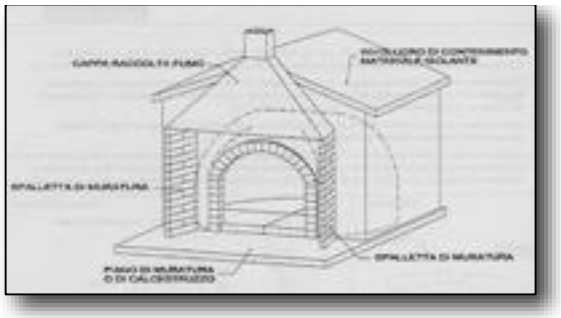

10.8. A metal vent with enclosed sides.

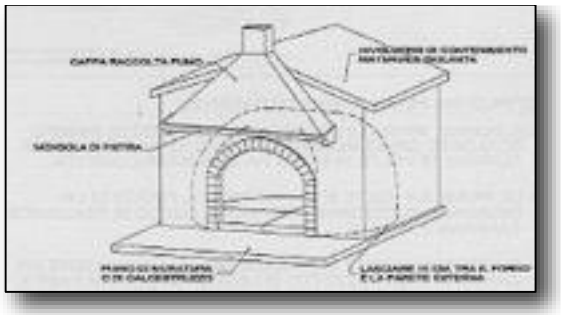

10.9. A metal vent with open sides.

© Forno Bravo, LLC 2007-2009. All Rights Served.

11. Oven Arch and Door

Oven Arch

A facade can be used to finish the front of the oven and hide the rough look of the vent. Although it may take some skill to create an arched entryway into the oven, you should find that your skills as a rough mason are more than adequate, particularly after the work you have done finishing your oven dome – look out Notre Dame! See Forno Bravo Photos (on www.fornobravo.com) for some ideas on design. Again this is a place where you may want to offset the bricks so that a ½ " to 1" reveal is made for a door. If a reveal is not made, that is fine if you do not leave a reveal, however your arch and supports for the arch should be flat so that a door can be accommodated.

11.1. A decorative brick arch forms the vent opening.

11.2. Another decorative entry arch.

11.3. Different style brick arch with setback.

Door

There are a few possibilities for doors. When your fire is going and your oven is heating up you may need to throttle down the fresh air that is going to the fire. A steel door, with a vented slot at the bottom of the door can also be fabricated.

© Forno Bravo, LLC 2007-2009. All Rights Served.

11.4. A metal oven door.

After you are done cooking your pizzas for the night and the fire has been raked out of the oven you can still cook a meal in it. An insulated door that is placed up against the inner revel on the oven side of the vent opening is used here. This door is located behind the vent opening:

A simple, thick hardwood door can also be used, but make sure that your handles are isolated so that you do not burn your hands. It may burn or char if your oven is over 500 F.

If you want a highly insulated oven door using FB Board, be certain to fully enclose the FB Board in another building material. FB Board is a ceramic fiber product that you should not come in contact with for long periods of time.

Other Door Design Options

- Mounting splits of firebrick on cement board.
- A sandwich of FB Board with cement board or a metal shell on either side.
- A sandwich of cement board, FB Board, and wood, where the cement board faces the hot oven.

Tips and Hints

You can build the form for your brick entry arch from either plywood, or Styrofoam.

To get the shape you want, lay out your arch on your from material, then mark the curve with a builder's pencil. Cut out the form, and you are on your way.

© Forno Bravo, LLC 2007-2009. All Rights Served.

12. Attaching the Chimney

Overview

Your chimney may be constructed with various methods, including Simpson DuraTech Chimney System (UL103HT), refractory chimney flue liner, a classical brick and mortar chimney, or a single wall steel chimney pipe.

Specifying building code and regulations is beyond the scope of these plans, as they differ among states, cities and local departments. Still, we want to emphasize that you should contact your local building department to determine your local building codes, and take care to follow them. Wood-fired ovens are a source of heat and flame, and you should consult local professionals when building your oven.

The following table outlines the internal diameter of the chimney using a round, steel chimney system for different oven sizes:

Oven Size	Chimney Diameter
32" - 36"	6" (internal)
40"+	8" (internal)

ASTM 1283 (Standard Practice for Installing Clay Flue Lining):

Flue liners shall be surrounded by masonry on all sides but shall not be bonded to the surrounding masonry. The flue liner shall contact the chimney wall only as necessary for support and alignment in order to permit the flue liner to expand and contract freely. The separation of the flue liner from the surrounding concrete or masonry shall not exceed the wall thickness of the flue liner. Where Seismic Reinforcing requires the space between the flue liner and the chimney wall to be grouted solid the flue shall be wrapped with ceramic fiber paper capable of withstanding temperatures of 2100 deg. F to prevent the flue liner from bonding to the chimney walls.

Flue liners should conform to ASTM C 315 (Standard Specification for Clay Flue Liners). They should be thoroughly inspected just prior to installation for cracks or other damage. Steel should be ASTM-A 36 (max of: 0.26% Carbon, 0.04% Phosphorus, 0.05% Sulfur).

12.1. Refractory flue liner.

UL103HT

According to its installation guide, “The Simpson DuraTech system has been approved for use with solid fuel appliances, including wood stoves, fireplaces, fireboxes, furnaces, water heaters, stoves, ranges, and other residential types appliances using gas, coal or wood, according to UL103HT. The system specifies a clearance of at least 2” between the DuraTech chimney system and any combustible materials, and a height of 3” above the roof, and 2” above any roof within 10’.”

© Forno Bravo, LLC 2007-2009. All Rights Served.

12.2 Duravent chimney.

12.3 UL103 anchor plate.

12.4. Simpson DuraTech chimney system.

Internal Masonry Chimney

For internal installations, the minimum air space clearance between interior masonry chimneys and combustible materials shall be 2”. Any chimney with at least one interior wall shall be treated as interior. All spaces between chimneys and floors or ceilings through which chimneys pass shall be fire stopped with non-combustible material. The fire stopping of spaces between chimneys and wood joists, beams or headers shall be galvanized steel not less thinner than 26 gage in thickness or non combustible sheet material not more thicker than 1/2 in.

If it is necessary to pass through combustible walls to connect the oven to a chimney liner, the following clearances must be maintained.

Method A. 12” (304.8 mm) Clearance to Combustible Wall Member: Using a minimum thickness 3.5” (89 mm) brick and a 5/8” (15.9 mm) minimum wall thickness clay liner, construct a wall pass-through. The clay liner must conform to ASTM C315 (Standard Specification for Clay Fire Linings) or its equivalent. Keep a minimum of 12” (304.8 mm) of brick masonry between the clay liner and wall combustibles. The clay liner shall run from the brick masonry outer surface to the inner surface of the chimney

© Forno Bravo, LLC 2007-2009. All Rights Served.

flue liner but not past the inner surface. Firmly grout or cement the clay liner in place to the chimney flue liner.

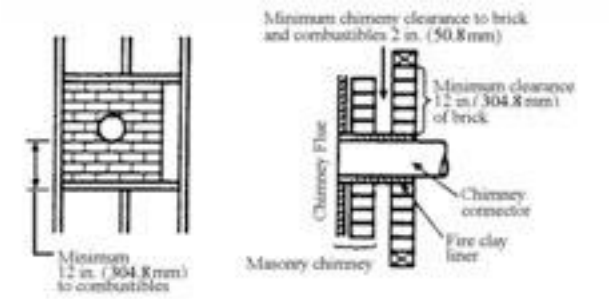

Method B. 9” (228.6 mm) Clearance to Combustible Wall Member: Using a 6” (152.4 mm) inside diameter, listed factory-built Solid-Pak chimney section with insulation of 1” (25.4 mm) or more, build a wall pass-through with a minimum 9” (228.6 mm) air space between the outer wall of the chimney length and wall combustibles. Use sheet metal supports fastened securely to wall surfaces on all sides, to maintain the 9” (228.6 mm) air space. When fastening supports to chimney length, do not penetrate the chimney liner (the inside wall of the Solid-Pak chimney). The inner end of the Solid-Pak chimney section shall be flush with the inside of the masonry chimney flue, and sealed with a non-water soluble refractory cement. Use this cement to also seal to the brick masonry penetration.

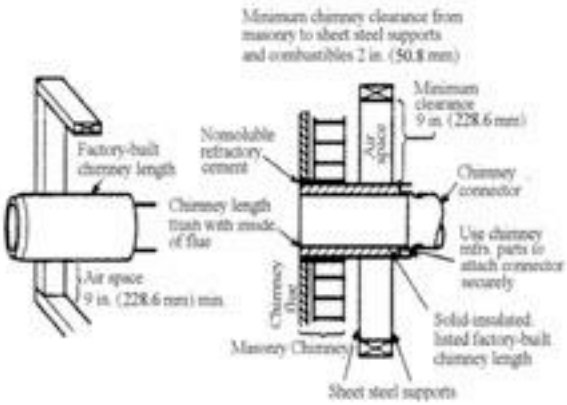

Method C. 6” (152.4 mm) Clearance to Combustible Wall Member: Starting with a minimum 24 gage (.024” [.61 mm]) 6” (152.4 mm) metal chimney connector, and a minimum 24 gage ventilated wall thimble which has two air channels of 1” (25.4 mm) each, construct a wall pass-through. There shall be a minimum 6” (152.4) mm separation area containing fiberglass insulation, from the outer surface of the wall thimble to wall combustibles. Support the wall thimble, and cover its opening with a 24-gage minimum sheet metal support. Maintain the 6” (152.4 mm) space. There should also be a support sized to fit and hold the metal chimney connector. See that the supports are fastened securely to wall surfaces on all sides. Make sure fasteners used to secure the metal chimney connector do not penetrate chimney flue liner.

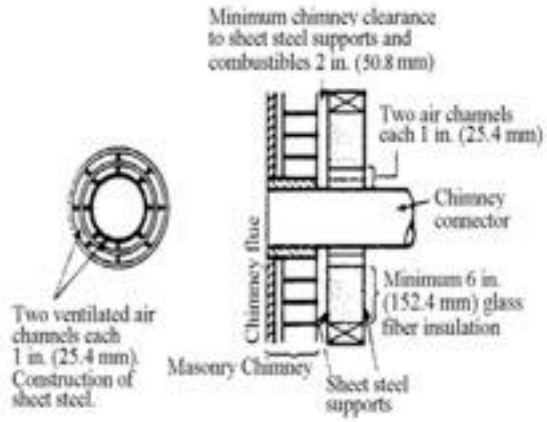

Method D. 2” (50.8 mm) Clearance to Combustible Wall Member: Start with a solid-pak listed factory built chimney section at least 12” (304 mm) long, with insulation of 1” (25.4 mm) or more, and an inside diameter of 8” (2 inches [51 mm] larger than the 6” [152.4 mm] chimney connector). Use this as a pass-through for a minimum 24-gage single wall steel chimney connector. Keep solid-pak section concentric with and spaced 1” (25.4 mm) off the chimney connector by way of sheet metal support plates at both ends of chimney section. Cover opening with and support chimney section on both sides with 24 gage minimum sheet metal supports. See that the supports are fastened securely to wall surfaces on all sides. Make sure fasteners used to secure chimney flue liner.

© Forno Bravo, LLC 2007-2009. All Rights Served.

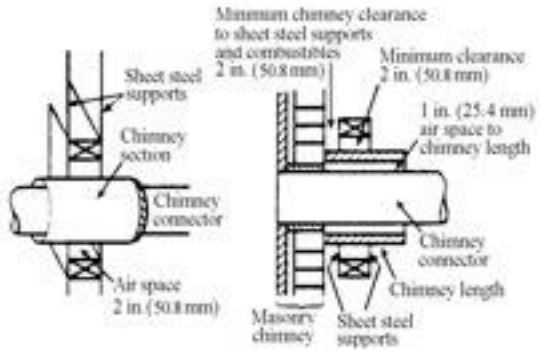

Chimney Height and Size

Flue sizing depends on such local conditions as prevailing wind, height of chimney, proximity of taller, nearby structures, etc. A good rule of thumb is to choose a flue that has an area of about 3-4 times the door height. Depending on what is nearby, you may need a taller chimney. One option is to test your oven after it has cured with a single section of chimney pipe to see how well it draws. If it is not enough, you can add another section to extend it

Spark Arrestor/Chimney Caps

Use a spark arrestor chimney cap. It uses heavy gauge steel and is similar in style to a window screen. Its purpose is to trap burning embers that may float up the chimney and stop them there. Once the fuel of the ember has been used, its temperature will decrease and the by-product will be a small amount of ash. A chimney cap will also keep rain from pouring down the flue. There are many styles, ranging from a plain metal arrangement, to whimsical ceramic gargoyles.

The Simpson DuraTech chimney system contains a UL-approved chimney cap.

© Forno Bravo, LLC 2007-2009. All Rights Served.

13. Oven Dome Insulation

Overview

After your oven dome and vent have been assembled, the oven is covered with insulation, typically 3” of woven ceramic insulating blanket, such as FB Blanket, with optional loose insulation, such as vermiculite or perlite. Unlike thermal mass, where too much can be a bad thing, there isn't really such a thing as too much insulation. Woven ceramic insulation has the advantages of being more efficient and requiring using less space than other insulating materials, and it provides better oven heat retention and oven performance.

Loose insulators, on the other hand, tend to be slightly less expensive. If cost is the overarching consideration, vermiculite and perlite can be used either loose within the oven enclosure, or with Portland cement to make insulating concrete. They do not work as well as modern ceramic products, but they will do in a pinch.

The Forno Bravo Pompeii Oven Kit includes enough FB Blanket to fully insulate the oven dome with 3” of ceramic insulation.

As a rule of thumb, FB Blanket provides roughly double the insulating value of loose vermiculate (and more than double vermiculite concrete, which is less efficient). Here are three roughly equivalent insulating schedules.

FB Blanket	3”	1”	0
Vermiculite	0	4”	6+”

Instructions

Blanket insulation such as FB Blanket are easy to work with, in that it is easy to cut and shape, and it tends to stay where you place it. Always use a mask when working with any ceramic fiber products.

When using multiple layers of FB Board take care to stagger all joints.

An Igloo design oven can incorporate FB Blanket or a combination of FB Blanket and insulating concrete (vermiculite Portland cement) as part of the Igloo shape.

13.1. FB Blanket held in place with metal bands.

13.2 Multiple layers of FB Blanket.

© Forno Bravo, LLC 2007-2009. All Rights Served.

13.3 FB Blanket covered with wire and insulating concrete.

For walled enclosure and indoor partition wall installations, you can again use all blanket insulation, all loose insulation, or a combination of the two.

13.4 Loose vermiculite fills a walled enclosure.

Tips and Hints

If your walled enclosure is significantly larger than your oven, you can block off the corners with concrete board to minimize the amount of vermiculite that will be required to fill the open chamber.

13.5 Concrete board blocks off the corners.

© Forno Bravo, LLC 2007-2009. All Rights Served.

14. Enclosure Design Styles

Overview

The oven enclosure must be sealed to protect your Pompeii Oven and its insulation from water. It can be constructed from concrete block, rebar and stucco mesh, metal stud and concrete board or free standing brick or stone. Basically, the style of the enclosure is up to you, your imagination, and the availability of local materials. The examples shown here from around the country will give you a start.

For other design ideas, check out Forno Bravo Photos at http://www.fornobravo.com/pizza_oven_photos/introduction.html.

Barrel Vault

Gable House

Stone House

Stucco House

Indoor Corner Oven

Igloo

© Forno Bravo, LLC 2007-2009. All Rights Served.

Brick House

Wall Oven

Igloo

Stone House

Gabled House

Stone House

© Forno Bravo, LLC 2007-2009. All Rights Served.

Corner Oven

Gabled Stone House

Stone House

© Forno Bravo, LLC 2007-2009. All Rights Served.

15. Igloo Enclosure

Overview

The Igloo is a traditional Italian and Mediterranean pizza oven design style where the enclosure follows the basic lines of the oven dome and chimney -- thus the Igloo.

Instructions

There are two ways of making the Igloo shape, both of which follow the guidelines set forth in Graphics 15.1 and 15.2. First, you can create the Igloo using stucco lathe following the shape of the oven an insulation. The insulating layer, either FB Blanket or a combination of FB Blanket and insulating concrete is covered with a finish coat of waterproof stucco (see Photo 15.3 and 15.5).

Second, the Igloo shape can be created with rebar and stucco lathe, separately from the dome (see Photo 15.4). Drill 1/4" holes around the perimeter of the oven hearth, the distance you want away from the exterior of your oven, to accommodate your insulation thickness. Insert pieces of pencil rebar in the holes, and bend them to the desired Igloo shape. Cover the pencil rebar with stucco mesh, and secure it in place with concrete tie wire to make the Igloo frame solid.

Fill the gap between the stucco mesh and the oven with a vermiculite-based insulating concrete. Cover the entire structure with a 1/2"-3/4" undercoat of stucco, followed by a finish stucco coat, and then, seal the entire oven with a weatherproof stucco coat or paint.

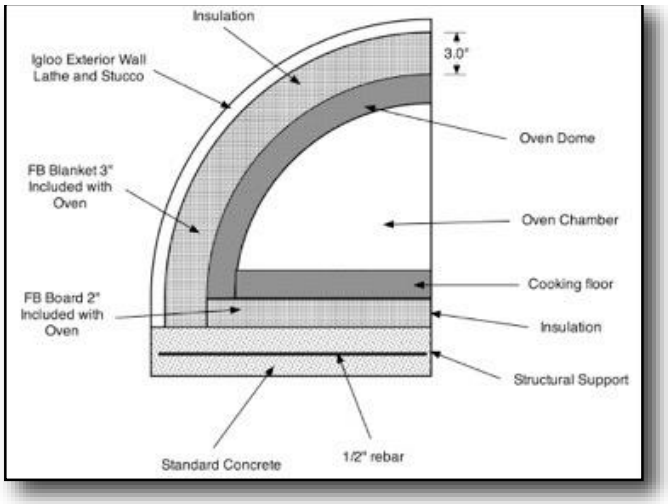

15.1 The layers of an Igloo oven using FB Board and FB Blanket.

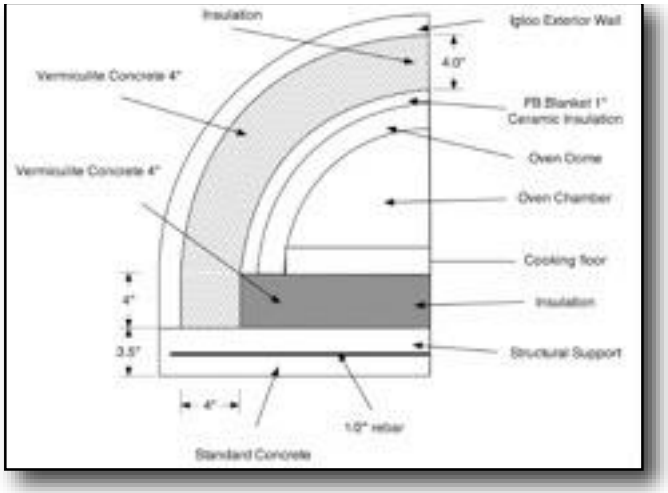

15.2 The layers of an Igloo oven using vermiculite insulating concrete.

© Forno Bravo, LLC 2007-2009. All Rights Served.

15.3. The oven dome and lathe shape the Igloo.

15.4 Rebar and lathe shape the Igloo.

15.5 Rough coat of stucco on wire lathe.

15.6 The Igloo shape coming together.

15.7 A typical "Australian" style Igloo

Hints and Tips

Consider using modern, latex-based color-in stucco for your final Igloo finish coat. They are waterproof and crack-proof, and they will even match a color swatch.

If you want true old-world charm, you can still opt for traditional three-coat stucco. You can either color the final smooth coat (and burnish it for character), or apply a smooth final coat, and then paint it -- and apply a glaze for the final effect.

© Forno Bravo, LLC 2007-2009. All Rights Served.

16. Walled Enclosures

Overview

The Gabled House, or walled enclosure, is one of the most traditional ways to finish a brick oven. There are examples of these ovens throughout the Italian countryside.

The basic process for finishing your oven this way is very straightforward. Construct walls around your oven using metal studs to a height of at least 6" higher than the top of your insulated oven dome. Face the metal studs with concrete board, and finish the exterior of the oven with stucco, brick, or stone. The roof design is up to the builder, and it can be finished with stone, clay tile or modern composite tile.

DO NOT USE WOOD STUDS, PLYWOOD or DRYWALL when building a walled brick oven enclosure.

The gap between the insulated oven and the house walls can either be left open, or it can be filled with loose vermiculite insulation.

Instructions

Using traditional partition wall building techniques, build a wall using a single metal stud lying flat as a bottom plate, and two metal studs lying flat as the top plates for each wall. Attach the bottom plate to the concrete hearth slab using concrete screws. Set metal studs every 15" in the body of the wall to support the 3‘x5’ Hardibacker concrete boards.

Interlock the top two metal stud top plates at each corner to give the structure more strength. Set two vertical studs at each corner for a larger face to attach the concrete board, and to give the structure more strength.

The Oven Opening

Set the location of the front wall of the oven enclosure so that the brick arch at the oven opening projects forward by a couple of inches. Set one horizontal stud at the top of the arch, and set two additional studs at a 45-degree angle on the sides of the arch to provide support for the concrete board.

Finish

Attach your concrete board using screws designed for metal studs. You can finish your oven with stucco, brick, or stone. The walled enclosure is also a traditional way to finish a pizza oven. To finish your oven as a walled enclosure, construct walls around your oven using metal studs, concrete blocks, brick or stone to a height of at least 6" higher than the top of your oven dome. Face the metal studs with concrete board, and finish the exterior of the oven with stucco, brick or rock. The roof design is up to the designer, and can be finished with stone, clay tile or modern composite tile. The gap between the oven and the enclosure walls is filled with loose vermiculite insulation.

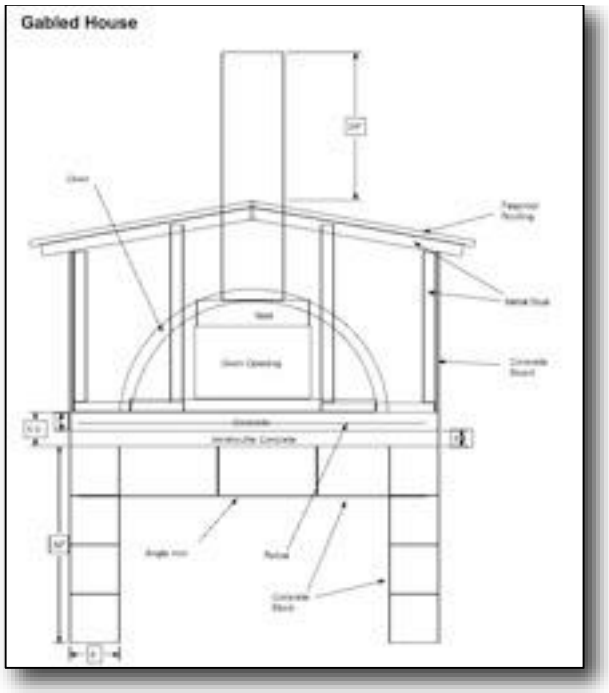

16.1. The basic walled enclosure.

© Forno Bravo, LLC 2007-2009. All Rights Served.

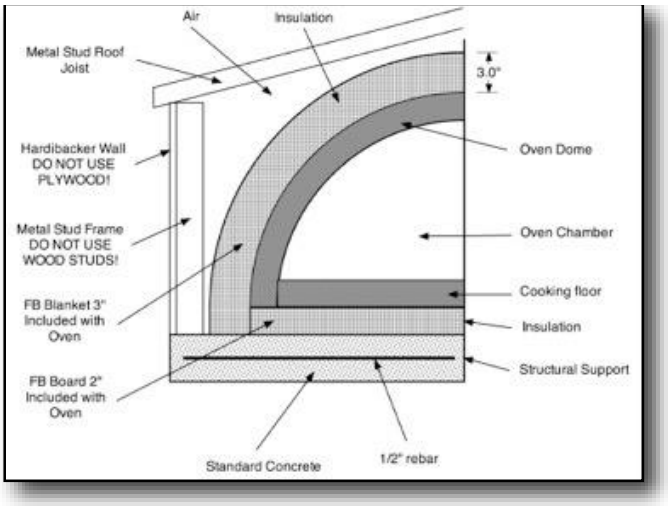

16.2. The layers of a walled enclosure oven using FB Board and FB Blanket.

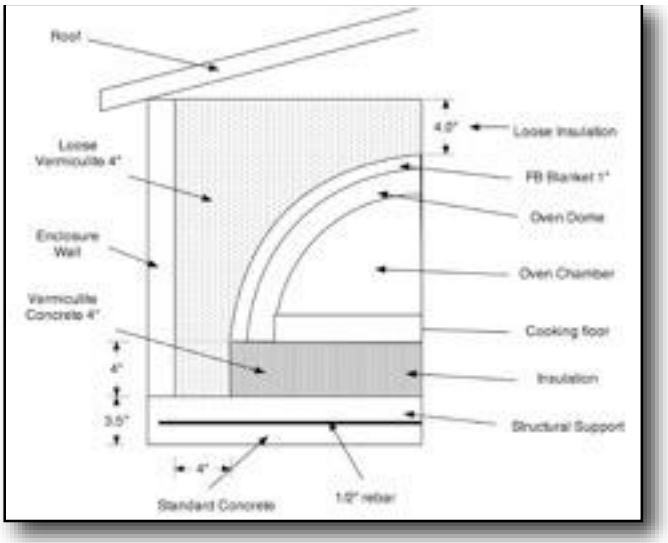

16.3. The layers of a walled enclosure oven using FB Blanket and vermiculite.

16.4 Metal studs and a gabled roof.

16.5 Metal studs walls with a shed roof.

© Forno Bravo, LLC 2007-2009. All Rights Served.

16.6 Attach concrete board.

Tips and Techniques

Build your walled enclosure the same way you would build a partition wall using wood studs. Set the vertical studs on 15” centers, and always center your concrete board seams directly on your vertical studs.

Use the flat head screws design specifically for attaching concrete board to metal studs, as they do a good job of drilling into the metal studs, and leave a flat surface that can be easily finished with stucco or stone.

© Forno Bravo, LLC 2007-2009. All Rights Served.

17. Curing Your Oven

Although it may seem that your oven is dry by the time you are finished with your installation, there is still moisture in the oven, mortars and concrete that must work its way out. It is important at this point that you cure your oven slowly, by building a series of five increasingly larger fires, starting with a low temperature. If you begin building large fires in your oven right way, you will compromise your oven's longevity and ability to cook well, and cause damage, including cracking.

After you have installed your oven, there is still pounds of water in the mortars, hearth concrete, vermiculite, and the oven chamber and vent.

Before you start the curing process, let the complete oven sit for one week. Then, start a series of low and growing fires. For an accurate oven temperature reading, use the Digital Infrared Thermometer, which can be purchased in the Forno Bravo Store.

Day 1. Maintain a fire temperature of 300ºF throughout the day and as long as possible into the evening. If you cannot continually run a 300ºF for at least six hours, repeat step 1 for a second day before moving on to Day 2.

Day 2. Repeat at 350ºF.

Important Note. While it is difficult to maintain consistent, low temperature fires, it is critical for proper curing that you do not go above these temperatures during the first two days, or a total of 16 hours.

Day 3. Repeat at 400ºF.

Day 4. Repeat at 450ºF.

Day 5. Repeat at 500ºF.

Close the oven door every evening to preserve dryness and heat.

Enjoy your oven. You have earned it. For additional information on how to get the most from your oven, read our guide to Wood Fired Cooking, available through our web site – www.fornobravo.com.

Important Notes

Use solid wood fuels only. DO NOT use charcoal, pressure treated lumber, chipped wood products, sappy wood such as pine, laminated wood or any material other than dry medium or hard firewood.

Do not use products not specified for use with this oven.

DO NOT USE liquid fuel (firelighter fluid, gasoline, lantern oil, kerosene or similar liquids) to start or maintain a fire.

Never use water to lower temperature inside the oven, or to extinguish the fire.

There must be a period of time between completing the masonry work and beginning the actual firing cure. Longer is better than shorter, particularly for the actual dome cement. The cement and mortar must cure first and this process is actually improved by keeping the cement moist and not letting it dry out. Cement is exothermic and gives off heat. If you were to start the Oven curing too soon, you drive this exothermic action the wrong way and damage the new cement.

Also, using a space heater can help, but only so far. It is not an alternative to fire curing. We tested a space heater in an assembled Forno Bravo precast oven for two days, then quickly heated the oven up, (don't do this at home -- it was an experiment to see what would happen to an oven that we have here) and we found that we created a very large amount of steam from the oven, mortars and vermiculite, which went on for hours and hours.

© Forno Bravo, LLC 2007-2009. All Rights Served.

Appendix 1. Materials and Tools List

Tools

The prices provided are in US$, and are intended to give you a general guideline for costs. You will need:

- A circular saw with three blades: general-purpose wood, metal ($5) and diamond masonry ($20). The diamond masonry blade costs more, but last longer and cuts quickly.
- A hammer (preferably with a shock-reducing grip)
- A rubber mallet (preferably the “non-rebound” type).
- 2'-3' level. A long level is worth is it. You can find a long, inexpensive aluminum level at Home Depot if you do not already have one.
- Grinder (optional). You can use the grinder to cut rebar, wire, and concrete block. An inexpensive one will cost about $25, and will save you time from not having to frequently change blades on your circular saw.
- A chalk line (<$10).
- A builder’s pencil.
- A 1/4"x1/4" notched tile trowel for setting the cooking floor.
- Goggles and a dust mask
- A mixing tub (<$15)
- A hoe for mixing (<$10 for a cheap one, $20 for a good one. Many builders buy the real cheap ones, and toss them after the project is over).
- A square-edged transfer shovel ($20).
- A tamper ($20 or build one from a square of plywood and a 2x4).
- Concrete mixer (optional). Rent one from Home Depot.
- Tile saw (optional). You can get by with a diamond blade and a circular saw. If you plan on using complicated tile, brick or stone trim or finish, you can either rent a tile saw, or purchase a small, but functional unit from Home Depot for less than $100.
- A bucket, scrub brush and sponge for clean up.
- Ratcheting cargo straps (optional). About $10 at Walmart. Used to hold the hearth form when your pour your concrete.
- A garden sprayer to keep your masonry damp.

Material List 42" Oven

80" x 94" Foundation

(46) 80lb bags of Ready-Mix concrete

(8) 10' lengths of 1/2" rebar, four cut to 80"; four cut to 94"

(4) 2"x6"x8' studs for framing, two cut to 83"; two cut to 94"

(48) sq. ft of wire mesh

(12) rebar stand-offs

(104) sq. ft of 6 mil plastic sheeting

Handful of plastic zip-ties, or ball of tie wire

1/2 cu yd of gravel

(1) box 2 1/2" framing nails

72" x 84 " Block Stand

(63) 8x8x16 blocks, 12 of which are cut to 8x8x12

(10) 8x8x8 blocks

(3) 10' pieces of 1/2" rebar, each cut into three 40" sections to fill nine block cores

(14) 80lb bags concrete for filling every other core

(2) 1.5"x1.5"x56" angle iron (for front span)

(3) 60lb bags mortar (to level first course of blocks, if needed)

© Forno Bravo, LLC 2007-2009. All Rights Served.

Insulating Hearth

(2) 4'x'8x3/4" sheets of plywood or particle board

(4) 2"x4"x8' wood studs

(4) 2"x6"x8' wood studs

(1) box shims (or make your own from scrap wood)

The rest of the 2 1/2" framing nails

(12) 10' pieces of 1/2" rebar, (6) cut to 72"; (6) cut to 84"

(30) 80lb bags of pre-mixed concrete

Either, (2-3) 4cu ft bags of vermiculite or perlite

(2) 90lb bag of Portland cement

Or, (4) 24”x36”x2” FB Board panels

Cooking Floor

About 65 full firebricks, set on their flat side

Fine mesh sand and fireclay

Oven Dome

About 135 full firebricks, cut in half

About (150-200) lb. FB Mortar high heat mortar

(1) 4'x1.25"x1.25" angle iron (cut in half)

Styrofoam panels (for forms)

Dome Insulation

Either, (1) 50 sq. ft box of FB Blanket and (3) 4 cu ft bags Vermiculite/Perlite

Or, (6) 4 cu ft bags of Vermiculite/Perlite

Or, (3) 50 sq. ft boxes of FB Blanket

Vent and Arch (optional)

About (30) common clay bricks (depends on style)

About (50) lb.lb. masons mortar

Chimney

9” round, or 6”x10” 24”-36” clay flue liner

Or, 8” DuraTech anchor plate, 24”-36” chimney pipe, and cap

Material List 36" Oven

71" x 80" Foundation

(30) 80lb bags of Ready-Mix concrete

(8) 10' lengths of 1/2" rebar, (4) cut to 80";(4) cut to 94"

(4) 2"x6"x8' studs for framing, (2) cut to 83";(2) cut to 94"

(48) sq. ft of wire mesh

(12) rebar stand-offs

(104) sq. ft of 6 mil plastic sheeting

Handful of plastic zip-ties, or ball of tie wire

1/2 cu yd of gravel

(1) box 2 1/2" framing nails

63" x 70 " Block Stand

(50) 8x8x16 blocks, (12) of which are cut to 8x8x12

(5) 8x8x8 blocks

(3) 10' pieces of 1/2" rebar, each cut into (3) 40" sections to fill nine block cores

(14) 80lb bags concrete for filling every other core

(2) 1.5"x1.5"x56" angle iron (for front span)

(3) 60lb bag mortar (to level first course of blocks)

Insulating Hearth

(2) 4'x'8x3/4" sheets of plywood or particle board

(4) 2"x4"x8' wood studs

(4) 2"x6"x8' wood studs

(1) box shims (or make your own from scrap wood)

The rest of the 2 1/2" framing nails

(12) 10' pieces of 1/2" rebar, (6) cut to 72"; (6) cut to 84"

© Forno Bravo, LLC 2007-2009. All Rights Served.

(17) 80lb bags of pre-mixed concrete

Either, (2) 4cu ft bags of Vermiculite or Perlite

(1) 90lb bag of Portland cement

Or, (3) 24”x36”x2” FB Board panels

Cooking Floor

About 60 full firebricks, set on their flat side

Fine mesh sand and fireclay

Oven Dome

About 120 full firebricks, cut in half

About (130-180) lb. high heat mortar

(1) 4'x1.25"x1.25" angle iron (cut in half)

Styrofoam panels (for forms)

Dome Insulation

Either, (1) 50 sq. ft box of FB Blanket and (3) 4 cu ft bags Vermiculite/Perlite

Or, (6) 4 cu ft bags of Vermiculite/Perlite

Or, (3) 50 sq. ft boxes of FB Blanket

Vent and Arch (optional)

About (30 or more) common clay bricks (depends on style)

About (50) lb. masons mortar

Chimney

6” round, or 4”x8”” 24”-36” clay flue liner

Or, 6” DuraTech anchor plate, 24”-36” chimney pipe, and cap

Hints and Tips

Check Home Depot to locate vermiculite and perlite. You might find it in their garden center. If not, try pool supply (chemicals, etc.) and agriculture supply (fertilizer, etc.) stores. The large bag costs less than buying lots of small bags from a nursery.

We recommend using a dust mask when working with the loose fill. **Caution**. Perlite can be coated with silicone to make it slide easily into block cores, where it's commonly used as an insulator. Make sure you locate plain, horticultural grade perlite, not the construction grade. The insulative properties are nearly identical.

© Forno Bravo, LLC 2007-2009. All Rights Served.

Appendix 2. Brick Primer

Deciding what type of brick you will use is one of the first choices you will have to make when starting to build a Pompeii Oven. You will use brick in the cooking floor, the oven dome and perhaps for your decorative vent arch, oven landing and other decorative trim.

This page explains the different types of bricks and what the trade-offs are between them. It should help you decide what types of brick you are going to use, and it can help you find the right brick at your local masonry supply store. It might be useful to take this page with you when you go shopping.

Here are some basic brick types:

Medium duty firebrick.

We recommend medium duty firebrick for both the cooking floor and dome of the Pompeii oven, and it is the type of firebrick we provide as part of the Pompeii Oven Kit. Medium duty firebricks are comprised of roughly 38% alumina, and are highly compressed and kiln fired. They heat up quickly, easily withstand the 1000ºF heat your oven will reach, and are designed for the rapid heat-up and cool down (thermal cycling) that your oven will experience. This type of firebrick will also reach the heat required for baking Pizza Napoletana pizza quickly than clay brick, as they are more efficient at conducting heat.

Further, because firebrick is designed to withstand thermal cycling, your oven will last longer, though for most home ovens this is not an important issue, and your oven will probably outlast you—whichever brick you choose.

When choosing your firebrick, look for a brick with straight edges for your cooking floor. It is important that the bricks in the floor fit snuggly against each other, and a curved edge will result in a gap between the bricks and in your cooking floor.

A typical medium firebrick weighs a little more than 8 pounds and is yellow. The price of a good quality firebrick should be around $1.20.

Low duty firebrick.

This is the basic fireplace firebrick stocked by many masonry supply stores. They have a lower alumina content than a medium duty firebrick (around 30%), they have more non-refractory impurities, and they are less dense. That said, low duty firebricks are a good choice for building a Pompeii Oven, and other than considering the Pompeii Oven Kit from Forno Bravo, it is not worth the effort of trying to find a higher quality firebrick in your region. With gas fireplace insert replacing firebrick fireplaces and the modernization of heavy industry, it is becoming increasingly difficult to find high quality firebricks.

Red clay brick.

This is the traditional red clay brick that you find at Home Depot and at masonry supply stores. Clay bricks are made from clay, and fired in a kiln. They are typically made from local clay, as shipping is too expensive, and fired to between 2000F - 3000F (high enough to fuse the minerals). You can use clay brick in the oven dome, but we would not recommend using them in the oven floor. There are trade-offs to consider.

There are two shortcoming to using a clay brick in your oven dome. First, thermal cycling will cause clay brick to spall, where little pieces of the brick flake off, and could cause individual clay bricks to crack. It has happened to us. Second, clay brick is not as good a conductor as fire brick and as a result will take longer to heat up.

Still, you can find clay bricks for about $.25 at Home Depot, which make them the most cost-effective option.

Our view is that unless cost is a prohibiting factor, we would recommend firebrick. For example, a 42" oven some has roughly 180 bricks in the dome, so the difference in brick cost should be around $100. In the context of the overall cost of the oven, and large amount of human capital you will be investing in your oven, we think the extra cost of worth it.

If your choice is to build your oven with clay brick or not at all, we would strongly recommend building your oven with clay brick.

© Forno Bravo, LLC 2007-2009. All Rights Served.

Red clay bricks are typically used for building the decorative arch and optional sides around the oven vent and vent landing, and can be used for any decorative feature.

There are three types of brick that you need to avoid.

Concrete brick.

These are the concrete bricks you see at Home Depot for about $.12. They are made from standard Portland cement-based concrete and are air dried, not kiln fired. They will not withstand the heat inside your oven.

High duty fire brick.

These brick have very high alumina content (60% or more), get very hot (1500ºC and up) and are designed for continual high-heat applications, such as furnaces. They are expensive, and will get too hot for cooking food. In general, pizza wants heat between 750F and 900F, while bread and roasts cooks best between 500F and 600F. (Note that brick ovens are able to cook at higher temperatures without burning because of the moist heat inside the oven and shorter cooking times.)

Insulating fire brick.

These light-weight refractory bricks are designed to stop heat, and as such have low conduction and low heating holding capacity. They are often used to insulate industrial equipment. A typical insulating fire brick weighs about 2 lb., compared with an 8 lb standard duty firebrick.

© Forno Bravo, LLC 2007-2009. All Rights Served.

Appendix 3. Why the Pompeii Oven Plans are Free

When I got hooked on brick ovens a number of years ago, the choices were very limited. There were plans for a barrel vault bread oven ($100 for a photocopied set of plans), or you could pay a crazy amount of money for an imported oven. I built the oven from the plans, and before I even finished it, decided to build a second one inside during a kitchen remodel. Unfortunately, I was very disappointed with the barrel vault oven design -- for more on that, read our Why Round page.

Then I started traveling, and eventually came to live in Italy, where I saw the real brick ovens. The attitude toward wood-fired ovens is completely different here. There are pizza ovens everywhere -- in homes, courtyards, covered patio, freestanding enclosures, take-out pizzerias and fancy restaurants, and they are used all the time. That is when we decided to start Forno Bravo, and provide both pre-made pizza ovens (both precast and true brick pizza ovens), as well as free brick oven plans.

In Italy, pizza ovens are sold by garden centers pretty much the same way Home Depot sells Weber BBQs. They line them up, and they disappear. Prefabricated ovens are displayed right next to the refractory bricks, mortar, oven floors and insulation that are used for site-built ovens. Everyone knows how to install a pizza oven and how to cook in one, and the prefabricated ovens are priced fairly. The modular pizza oven kits outsell site-built brick ovens by a large margin, but hobbyists and muratore (stone masons) still build brick ovens.

My goal is to bring this dynamic to America -- pretty much the way you see it here in Florence. Our refractory ovens are priced fairly (a lot less than the alternatives), and with the Pompeii Oven plans, we transfer the knowledge you need to build your own oven. Either way, you get a great oven, and everyone benefits from your photographs, recipes and everything you learn.

Building a large English-language pizza oven community is fun, and will help grow awareness through word-of-mouth, and through great food. At some point in the future, hopefully, someone will see a Pompeii Oven, and if they don't have the skill or time to build one, will become a Forno Bravo customer.

Join the Forno Bravo Forum, tell a friend, take lots of photos for us to post on www.fornobravo.com, and send us your recipes.

Finally, we offer the Pompeii Oven Kit, a complete line of pizza oven tools, accessories, and pizzas ingredients at the Forno Bravo Store, so if you build a Pompeii Oven you can always buy your bricks, pizza peels and pizza flour from us.

Welcome to the community.

Forno Bravo, LLC

© Forno Bravo, LLC 2007-2009. All Rights Served.

Appendix 4. Thermal Mass Primer

Overview

Thermal mass and insulation are the two primary characteristics that describe an oven's ability to absorb and hold heat, and make it useful for cooking. An oven's thermal mass describes the part of the oven that is heated and provides heat to the oven chamber, while insulation describes the oven's ability to stop heat from escaping, or leaking, out of the oven -- where it is lost.

Thermal Mass

The thermal mass of a wood-fired oven can vary widely, from a simple 1 1/2" thick clay shell to a massive 12" thick brick bread oven. The barrel vault oven described in books and on the Internet has a 9” thick dome and hearth, which is much too massive for backyard cooking or a commercial pizzeria. When considering which oven is right for your application -- whether it is in your home or in a restaurant, you should take a number of factors into account.

Too much thermal mass is very bad. Heat, like most things in nature, likes equilibrium. If one side of a thermal mass, such as a block of concrete, is hot and the other is cool, nature will try to balance that heat by moving it from the hot spot to the cool spot -- eventually reaching equilibrium where everything is just warm.

In a wood fired oven, this means that it is strongly desirable for the thermal layers in an oven's dome and cooking surface to be completely hot when it is time to cook. If they are not, the heat in the oven will continue to "wick" away from the oven chamber, in an attempt to create equilibrium in the whole thermal mass.

For example, if it requires 6 hours to fully heat up an oven's thermal mass, that oven will not cook well for the entire six hours it is heating up. Even though you are adding more and more fuel, the heat is moving away from the oven chamber as fast as you can replenish it. With this design it is virtually impossible to maintain the high heat required for the perfect 3-minute pizza.

At the same time, too little thermal mass can also be problematic. While an inexpensive clay oven shell might heat up quickly, it does not possess the heat holding ability to cook larger volumes of food, larger numbers of pizza, or bread. A thinner oven will begin start giving up heat as soon as the fire has stopped, creating a range of problems for the chef. As a side note, the Forno Bravo ovens all have enough thermal mass for typical home baking bread or roasting a turkey.

The composition up of an oven's thermal material is critical. Alumina and silica are two materials that have both high heat conductivity and high heat holding capability. An oven rich in these materials will heat up more quickly, and hold heat longer, than an oven made from clay, brick, or even standard firebricks.

By tailoring the thermal mass of the oven to the intended us, either residential or commercial, bread or pizza, it is possible to produce the optimal oven for a range of applications.

An oven built using 2"-3” of engineered refractory is perfect for a vast majority of home and garden applications.

Insulation

While too much thermal mass is bad, there is no such thing as too much insulation. Luckily, through modern manufacturing advances it is possible to readily and cost-effectively insulate a wood-fired oven. In fact, it is possible to make insulation cost and space trade-offs for a particular oven installation.

Which is a good thing. As the optimal oven design demands a thermal layer that can be efficiently heated throughout, it also demands that the oven's insulating layers be able to stop the heat in that layer, in order to hold it inside the oven.

There is a range of insulating products that you can put to use:

© Forno Bravo, LLC 2007-2009. All Rights Served.

For the dome, FB Blanket, a woven ceramic blanket, is highly efficient, and takes up very little space. We provide an ample amount of woven ceramic insulation with each modular Forno Bravo oven, and we use FB Blanket in our fully assembled Forno Bravo ovens.

Under the oven hearth, FB Board, an engineered insulating panel, provides an effective layer beneath the thermal layers of the oven floor.

The graphic below shows how heat is retained in a pizza oven, and how it migrates to the outer edge of the larger mass of a bread oven. By filling the entire mass of the oven dome and floor with heat, a well-insulated pizza oven can cook pizza virtually indefinitely.

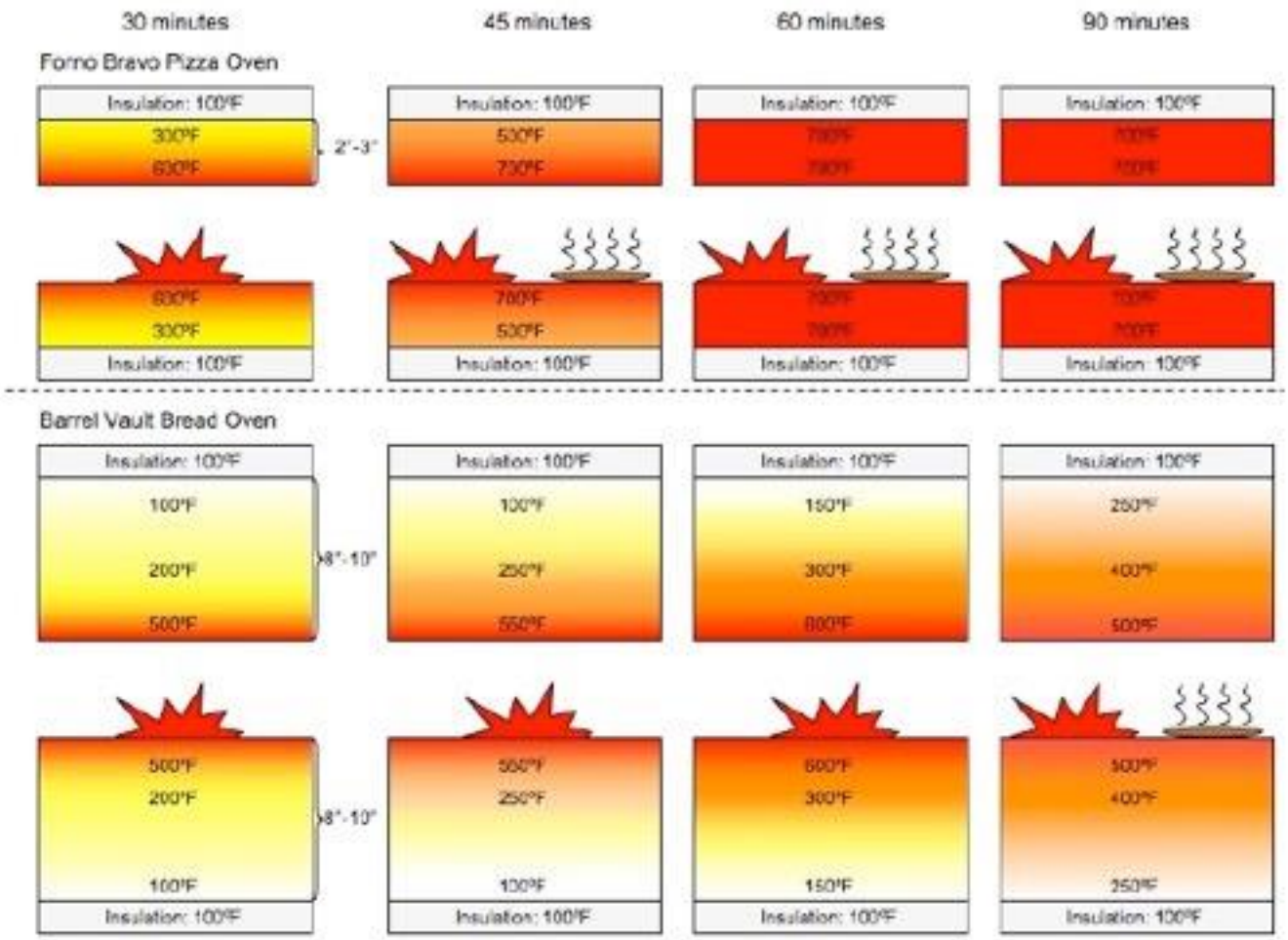

Appendix 5. Wood-Fired Oven Anatomy

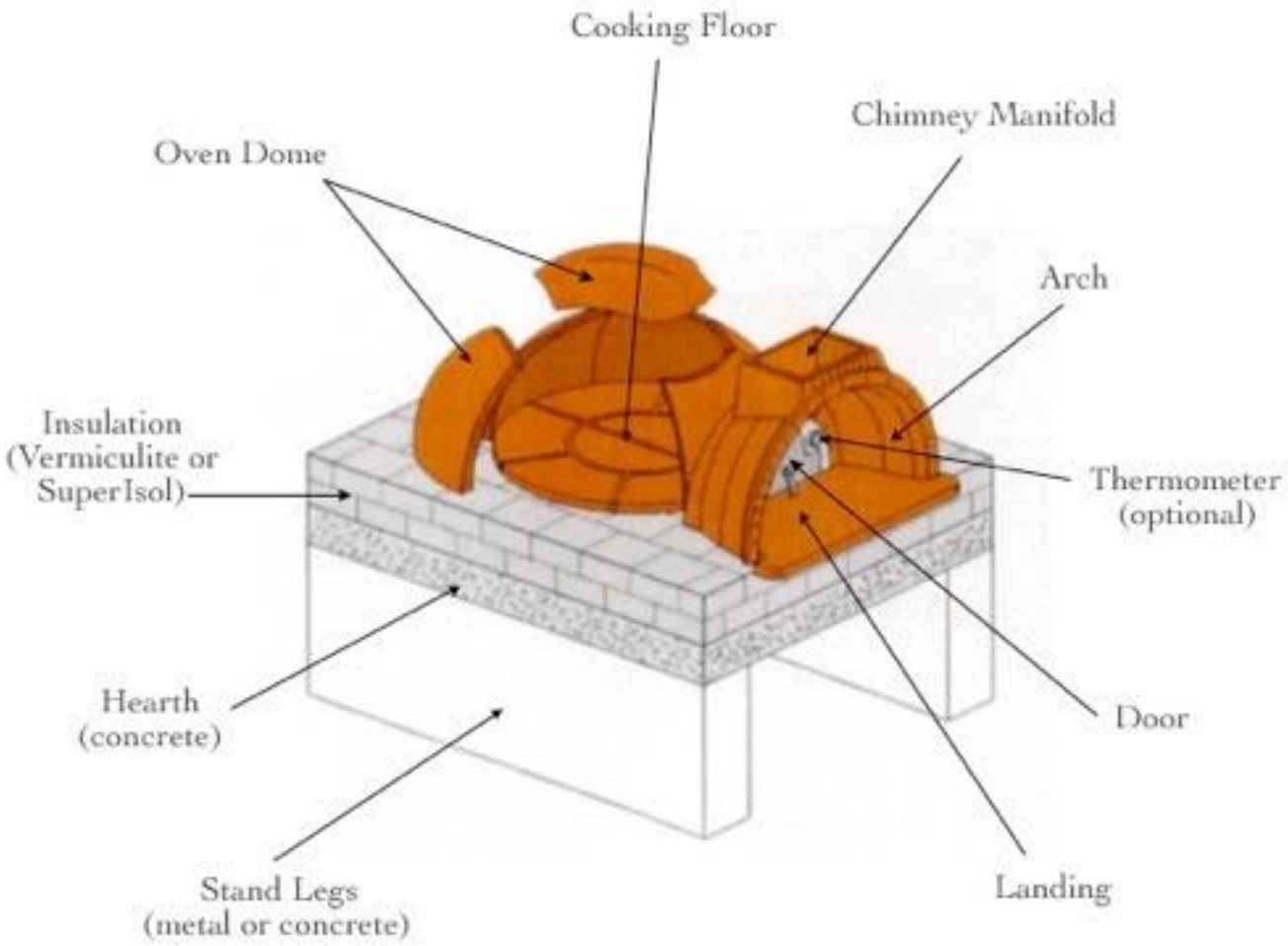

Fig 1. The basic components of a wood-fired pizza oven.

© Forno Bravo, LLC 2007-2009. All Rights Served.

Appendix 6. High Heat Mortar

Overview

A Forno Bravo modular oven, or a brick Pompeii Oven is assembled with a high-heat, waterproof mortar. You have two basic choices: FB Mortar, a commercially-produced refractory mortar produced for Forno Bravo, or a mortar that you mix at the building site, using locally sourced materials. The site-mixed mortar can be made with standard Portland cement.

The best solution is to use FB Mortar, or another pre-mixed refractory mortar. Forno Bravo stocks FB Mortar in California, and we highly recommend it. It is pre-mixed, so you just have to add water. It sets hard, is easy to work with, cures quickly, and is heat resistant to 1700F.

If you don't want to worry about shipping FB Mortar, or want to save money, you can make your own mortar, using fireclay and Portland cement. Fireclay is heat-resistant clay made up of aluminate and silica. When you mix fireclay with Portland cement, sand and lime, you create a product that is more heat resistant than basic mason's mortar (Portland cement with sand and lime).

Measure your ingredients by volume (use a bucket or shovel to measure), and mix only the amount you will us within an hour or so.

Portland cement Fireclay Mortar Formula

•1 part Portland cement

•3 parts sand

•1 part lime

•1 part fireclay

Still, fireclay mortar is less heat resilient and thermally conductive than a true refractory mortar.

Using FB Mortar

Mix the dry refractories to be sure that everything is well distributed, and then add just enough cold water reach the consistency of peanut butter. Mix the mortar mix and water to fully incorporate the water and all the dry refractories.

Mix only what you need to use in small batches. You cannot "re-hydrate" the mortar after you have mixed it the first time.

It is important sure that you thoroughly soak your bricks before applying any mortar, and that you keep the mortar damp while it cures. You can spray the surface while you are working, and cover the bricks and mortar with plastic to allow the mortar to cure without drying out.

© Forno Bravo, LLC 2007-2009. All Rights Served.

Appendix 7. Pompeii Oven Kit

Pompeii Oven Kit

Build an Italian brick oven; Just add labor

The Pompeii Oven Kits provide the essential (and often hard to find) materials you need to build the brick oven described in the popular Forno Bravo Pompeii Oven eBook. Each Kit includes enough medium duty 9"x4.5"x2.5" firebricks to build the oven dome and vent, along with 12"x12"x2.5" cooking floor tiles, high temp, waterproof mortar, dome insulation and floor insulation—along with the Pompeii Oven eBook on the Forno Bravo CD ROM—delivered to your doorstep. Just add labor.

Each Pompeii Oven Kit features industrial-grade refractories and high-tech insulators, ensuring that your oven will reach and hold pizza making temperature and retain heat for baking and roasting. Our medium duty firebrick and cooking floor tiles are 38% alumina, 134 lb density, and are rated to 2,500°F. They are perfect for a pizza oven. The FB Board and FB Blanket insulators are rated to 2,300°F and are incredibly efficient, and FB Mortar is rated to 2,500°F, and is fully waterproof for outside oven installation. We provide enough insulation for 3" over the oven dome and 2" under the oven floor to retain high heat inside the oven while keeping the outside enclosure cool.

The Pompeii Oven Kit is the right solution for any brick oven builder who wants to save the time and hassle of locating all the pieces for the Pompeii Oven locally, and who wants to be sure to purchase the right items. There are many types of brick, firebrick, mortar and insulation, and the Pompeii Oven Kit is comprised of the exact items you need. Further, many backyard oven builders are limited to using Portland cement-based mortar and loose, less efficient insulators, such as vermiculite and perlite. While these old-fashioned items are functional, they are not are durable as modern materials and do not perform—or last—as well as state-of-the-art materials.

Finally, and perhaps most importantly, the Pompeii Oven Kits are very reasonably priced. We purchase in bulk from a large refractory producer, we private label the products, and we pass the savings on to our builder community. Check around, and we think you will find that our price meets, or beats, the best prices you can find locally—even after you shop hard, drive lots of miles, and use multiple suppliers.

The Pompeii Oven Kit is delivered to your house on two wooden pallets. Using liftgate truck service, the materials are placed on your sidewalk or driveway, where you can easily move them to your building site.

You are ready to go. Join the Forno Bravo Forum, think pizza and have fun!

The highest-grade materials to build an Italian brick oven.

Pompeii Oven Sizes

	Cooking Surface (in)	Area (in²)	Pizzas (10")	Bread (lbs)
Pompeii90	*35.4"*	*0.72*	*2-3*	*17*
Pompeii110	*43.2*	*0.95*	*4-5*	*26*

Each Pompeii Oven Kit Includes

Medium duty 9"x4.5"x2.5" firebricks; 38% alumina, 134lb/ft³
Medium duty 12"x12"x2.5" floor tiles; 38% alumina, 134lb/ft³
FB Mortar high temperature, waterproof mortar
FB Blanket oven dome insulation
FB Board under oven floor insulation

Kit Specifications

Pompeii90
120 9"x4.5"x2.5" firebricks;
17 12"x12"x2.5" floor tiles
110 lbs. high temperature, waterproof mortar (FB Mortar)
Two 50 sq ft 1" insulating blankets (FB Blanket)
Three 24"x36"x2" insulating boards (FB Board)
Weight: about 1,600 pounds

Pompeii110
140 9"x4.5"x2.5" firebricks;
20 12"x12"x2.5" floor tiles
165 lbs. high temperature, waterproof mortar (FB Mortar)
Three 50 sq ft 1" insulating blankets (FB Blanket)
Three 24"x36"x2" insulating boards (FB Board)
Weight: about 2,000 pounds

Optional Accessories

Duravent UL103HT chimney system
20"W x 12.5"H metal oven door

For ordering information, visit the Forno Bravo Store.

© Forno Bravo, LLC 2007-2009. All Rights Served.